OM-250 147B 2011–04

Processes

Stick (SMAW) Welding

TIG (GTAW) Welding

Description

CC DC 1 Phase

Arc Welding Power Source

Si 160, STi 160, And STH 160

CE

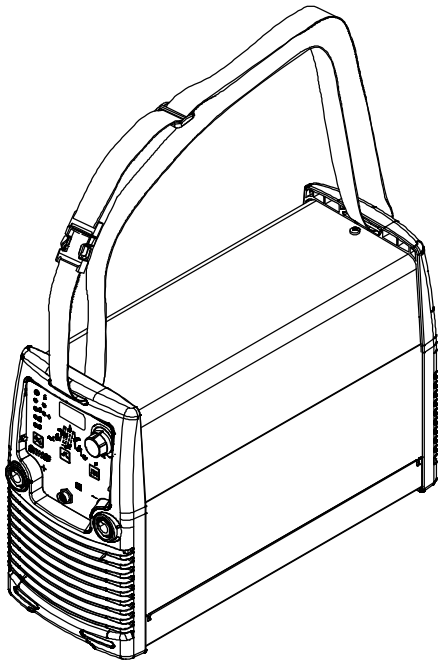

OWNER'S MANUAL

File: TIG (GTAW)

Visit our website at

www.MillerWelds.com

From Miller to You

Thank you and *congratulations* on choosing Miller. Now you can get the job done and get it done right. We know you don't have time to do it any other way.

That's why when Niels Miller first started building arc welders in 1929, he made sure his products offered long-lasting value and superior quality. Like you, his customers couldn't afford anything less. Miller products had to be more than the best they could be. They had to be the best you could buy.

Today, the people that build and sell Miller products continue the tradition. They're just as committed to providing equipment and service that meets the high standards of quality and value established in 1929.

This Owner's Manual is designed to help you get the most out of your Miller products. Please take time to read the Safety precautions. They will help you protect yourself against potential hazards on the worksite. We've made installation and operation quick and easy. With Miller you can count on years of reliable service with proper maintenance. And if for some reason the unit needs repair, there's a Troubleshooting section that will help you figure out what the problem is. The parts list will then help you to decide which exact part you may need to fix the problem. Warranty and service information for your particular model are also provided.

Miller Electric manufactures a full line of welders and welding related equipment. For information on other quality Miller products, contact your local Miller distributor to receive the latest full line catalog or individual catalog sheets.

TRUE BLUE® WARRANTY

Working as hard as you do – every power source from Miller is backed by the most hassle-free warranty in the business.

Miller®

TABLE OF CONTENTS

SECTION 1 – SAFETY PRECAUTIONS - READ BEFORE USING **1**
1-1. Symbol Usage 1
1-2. Arc Welding Hazards 1
1-3. Additional Symbols For Installation, Operation, And Maintenance 3
1-4. California Proposition 65 Warnings 4
1-5. Principal Safety Standards 4
1-6. EMF Information 4
SECTION 2 – DEFINITIONS **5**
2-1. Warning Label Definitions 5
2-2. Symbols And Definitions 6
2-3. WEEE Label (For Products Sold Within The EU) 6
SECTION 3 – SPECIFICATIONS AND INSTALLATION **7**
3-1. Important Information Regarding CE Products (Sold Within The EU) 7
3-2. Serial Number And Rating Label Location 7
3-3. Specifications 8
3-4. Selecting A Location 8
3-5. Volt-Ampere Curves 9
3-6. Duty Cycle And Overheating 10
3-7. Remote 6 Receptacle Information (STL And STH Models Only) 10
3-8. Electrical Service Guide 11
3-9. Connecting 1-Phase Input Power For 230 VAC 12
SECTION 4 – OPERATION **13**
4-1. Controls For Si 160 13
4-2. Amperage Adjustment Control 13
4-3. Preparing Unit For Stick Welding (Si Model) 14
4-4. Controls For STi 160 15
4-5. Preparing Unit For Stick Welding (STi Model) 16
4-6. Preparing Unit For TIG Welding (STi Model) 17
4-7. Controls For STH 160 18
4-8. Preparing Unit For Stick Welding (STH Model) 19
4-9. Preparing Unit For TIG Welding (STH Model) 20
4-10. Gas Connections (STH Models) 21
4-11. 2T Or 4T Trigger Mode Settings (STH Models) 22
4-12. Sequence Controls And Slope Down Settings (STH Models) 23
4-13. Pulser Control Settings (STH Models) 24
4-14. Resetting Unit To Factory Default Settings (STi And STH Models) 25
4-15. Lift-Arc™ And HF TIG Start Procedures 25
SECTION 5 – MAINTENANCE AND TROUBLESHOOTING **26**
5-1. Routine Maintenance 26
5-2. High Temperature Help Display 26
5-3. Troubleshooting 27
SECTION 6 – ELECTRICAL DIAGRAM **28**
SECTION 7 – PARTS LIST FOR Si MODELS **32**
SECTION 8 – PARTS LIST FOR STi MODELS **34**
SECTION 9 – PARTS LIST FOR STH MODELS **36**
WARRANTY

DECLARATION OF CONFORMITY

for European Community (CE marked) products.

ITW Welding Products Italy S.r.l Via Privata Iseo 6/E, 20098 San Giuliano M.se, (MI) Italy declares that the product(s) identified in this declaration conform to the essential requirements and provisions of the stated Council Directive(s) and Standard(s).

Product/Apparatus Identification:

Product	Stock Number
Si 160	059016011
STi 160	059016012
STH 160	059016013

Council Directives:

2006/95/EC Low Voltage

2004/108/EC Electromagnetic Compatibility

Standards:

IEC 60974-1 Arc Welding Equipment - Welding Power Sources: edition 3, 2005-07.

IEC 60974-10 Arc Welding Equipment - Electromagnetic Compatibility Requirements: edition 2.0, 2007-08.

EN 50445:2008 Product family standard to demonstrate compliance of equipment for resistance welding, arc welding and allied processes with the basic restrictions related to human exposure to electromagnetic fields (0Hz-300Hz)

EU Signatory:

December 21st , 2010

Massimigliano Lavarini

Date of Declaration

ELECTRONIC ENGINEER R&D TECH. SUPPORT

SECTION 1 – SAFETY PRECAUTIONS - READ BEFORE USING

Protect yourself and others from injury — read and follow these precautions.

1-1. Symbol Usage

DANGER! – Indicates a hazardous situation which, if not avoided, will result in death or serious injury. The possible hazards are shown in the adjoining symbols or explained in the text.

Indicates a hazardous situation which, if not avoided, could result in death or serious injury. The possible hazards are shown in the adjoining symbols or explained in the text.

NOTICE *– Indicates statements not related to personal injury.*

☞ *Indicates special instructions.*

This group of symbols means Warning! Watch Out! ELECTRIC SHOCK, MOVING PARTS, and HOT PARTS hazards. Consult symbols and related instructions below for necessary actions to avoid the hazards.

1-2. Arc Welding Hazards

The symbols shown below are used throughout this manual to call attention to and identify possible hazards. When you see the symbol, watch out, and follow the related instructions to avoid the hazard. The safety information given below is only a summary of the more complete safety information found in the Safety Standards listed in Section 1-5. Read and follow all Safety Standards.

Only qualified persons should install, operate, maintain, and repair this unit.

During operation, keep everybody, especially children, away.

ELECTRIC SHOCK can kill.

Touching live electrical parts can cause fatal shocks or severe burns. The electrode and work circuit is electrically live whenever the output is on. The input power circuit and machine internal circuits are also live when power is on. In semiautomatic or automatic wire welding, the wire, wire reel, drive roll housing, and all metal parts touching the welding wire are electrically live. Incorrectly installed or improperly grounded equipment is a hazard.

- Do not touch live electrical parts.
- Wear dry, hole-free insulating gloves and body protection.
- Insulate yourself from work and ground using dry insulating mats or covers big enough to prevent any physical contact with the work or ground.
- Do not use AC output in damp areas, if movement is confined, or if there is a danger of falling.
- Use AC output ONLY if required for the welding process.
- If AC output is required, use remote output control if present on unit.
- Additional safety precautions are required when any of the following electrically hazardous conditions are present: in damp locations or while wearing wet clothing; on metal structures such as floors, gratings, or scaffolds; when in cramped positions such as sitting, kneeling, or lying; or when there is a high risk of unavoidable or accidental contact with the workpiece or ground. For these conditions, use the following equipment in order presented: 1) a semiautomatic DC constant voltage (wire) welder, 2) a DC manual (stick) welder, or 3) an AC welder with reduced open-circuit voltage. In most situations, use of a DC, constant voltage wire welder is recommended. And, do not work alone!
- Disconnect input power or stop engine before installing or servicing this equipment. Lockout/tagout input power according to OSHA 29 CFR 1910.147 (see Safety Standards).
- Properly install and ground this equipment according to its Owner's Manual and national, state, and local codes.
- Always verify the supply ground – check and be sure that input power cord ground wire is properly connected to ground terminal in disconnect box or that cord plug is connected to a properly grounded receptacle outlet.
- When making input connections, attach proper grounding conductor first – double-check connections.
- Keep cords dry, free of oil and grease, and protected from hot metal and sparks.
- Frequently inspect input power cord for damage or bare wiring – replace cord immediately if damaged – bare wiring can kill.
- Turn off all equipment when not in use.
- Do not use worn, damaged, undersized, or poorly spliced cables.
- Do not drape cables over your body.
- If earth grounding of the workpiece is required, ground it directly with a separate cable.
- Do not touch electrode if you are in contact with the work, ground, or another electrode from a different machine.
- Do not touch electrode holders connected to two welding machines at the same time since double open-circuit voltage will be present.
- Use only well-maintained equipment. Repair or replace damaged parts at once. Maintain unit according to manual.
- Wear a safety harness if working above floor level.
- Keep all panels and covers securely in place.
- Clamp work cable with good metal-to-metal contact to workpiece or worktable as near the weld as practical.
- Insulate work clamp when not connected to workpiece to prevent contact with any metal object.
- Do not connect more than one electrode or work cable to any single weld output terminal.

SIGNIFICANT DC VOLTAGE exists in inverter welding power sources AFTER removal of inputpower.

- Turn Off inverter, disconnect input power, and discharge input capacitors according to instructions in Maintenance Section before touching any parts.

HOT PARTS can burn.

- Do not touch hot parts bare handed.
- Allow cooling period before working on equipment.
- To handle hot parts, use proper tools and/or wear heavy, insulated welding gloves and clothing to prevent burns.

FUMES AND GASES can be hazardous.

Welding produces fumes and gases. Breathing these fumes and gases can be hazardous to your health.

- Keep your head out of the fumes. Do not breathe the fumes.
- If inside, ventilate the area and/or use local forced ventilation at the arc to remove welding fumes and gases.
- If ventilation is poor, wear an approved air-supplied respirator.
- Read and understand the Material Safety Data Sheets (MSDSs) and the manufacturer's instructions for metals, consumables, coatings, cleaners, and degreasers.
- Work in a confined space only if it is well ventilated, or while wearing an air-supplied respirator. Always have a trained watchperson nearby. Welding fumes and gases can displace air and lower the oxygen level causing injury or death. Be sure the breathing air is safe.
- Do not weld in locations near degreasing, cleaning, or spraying operations. The heat and rays of the arc can react with vapors to form highly toxic and irritating gases.
- Do not weld on coated metals, such as galvanized, lead, or cadmium plated steel, unless the coating is removed from the weld area, the area is well ventilated, and while wearing an air-supplied respirator. The coatings and any metals containing these elements can give off toxic fumes if welded.

ARC RAYS can burn eyes and skin.

Arc rays from the welding process produce intense visible and invisible (ultraviolet and infrared) rays that can burn eyes and skin. Sparks fly off from the weld.

- Wear an approved welding helmet fitted with a proper shade of filter lenses to protect your face and eyes from arc rays and sparks when welding or watching (see ANSI Z49.1 and Z87.1 listed in Safety Standards).
- Wear approved safety glasses with side shields under your helmet.
- Use protective screens or barriers to protect others from flash, glare and sparks; warn others not to watch the arc.
- Wear protective clothing made from durable, flame-resistant material (leather, heavy cotton, or wool) and foot protection.

WELDING can cause fire or explosion.

Welding on closed containers, such as tanks, drums, or pipes, can cause them to blow up. Sparks can fly off from the welding arc. The flying sparks, hot workpiece, and hot equipment can cause fires and burns. Accidental contact of electrode to metal objects can cause sparks, explosion, overheating, or fire. Check and be sure the area is safe before doing any welding.

- Remove all flammables within 35 ft (10.7 m) of the welding arc. If this is not possible, tightly cover them with approved covers.
- Do not weld where flying sparks can strike flammable material.
- Protect yourself and others from flying sparks and hot metal.
- Be alert that welding sparks and hot materials from welding can easily go through small cracks and openings to adjacent areas.
- Watch for fire, and keep a fire extinguisher nearby.
- Be aware that welding on a ceiling, floor, bulkhead, or partition can cause fire on the hidden side.
- Do not weld on closed containers such as tanks, drums, or pipes, unless they are properly prepared according to AWS F4.1 (see Safety Standards).
- Do not weld where the atmosphere may contain flammable dust, gas, or liquid vapors (such as gasoline).
- Connect work cable to the work as close to the welding area as practical to prevent welding current from traveling long, possibly unknown paths and causing electric shock, sparks, and fire hazards.
- Do not use welder to thaw frozen pipes.
- Remove stick electrode from holder or cut off welding wire at contact tip when not in use.
- Wear oil-free protective garments such as leather gloves, heavy shirt, cuffless trousers, high shoes, and a cap.
- Remove any combustibles, such as a butane lighter or matches, from your person before doing any welding.
- After completion of work, inspect area to ensure it is free of sparks, glowing embers, and flames.
- Use only correct fuses or circuit breakers. Do not oversize or bypass them.
- Follow requirements in OSHA 1910.252 (a) (2) (iv) and NFPA 51B for hot work and have a fire watcher and extinguisher nearby.

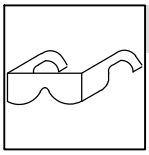

FLYING METAL or DIRT can injure eyes.

- Welding, chipping, wire brushing, and grinding cause sparks and flying metal. As welds cool, they can throw off slag.
- Wear approved safety glasses with side shields even under your welding helmet.

BUILDUP OF GAS can injure or kill.

- Shut off shielding gas supply when not in use.
- Always ventilate confined spaces or use approved air-supplied respirator.

ELECTRIC AND MAGNETIC FIELDS (EMF) can affect ImplantedMedical Devices.

- Wearers of Pacemakers and other Implanted Medical Devices should keep away.
- Implanted Medical Device wearers should consult their doctor and the device manufacturer before going near arc welding, spot welding, gouging, plasma arc cutting, or induction heating operations.

NOISE can damage hearing.

Noise from some processes or equipment can damage hearing.

- Wear approved ear protection if noise level is high.

CYLINDERS can explode if damaged.

Shielding gas cylinders contain gas under high pressure. If damaged, a cylinder can explode. Since gas cylinders are normally part of the welding process, be sure to treat them carefully.

- Protect compressed gas cylinders from excessive heat, mechanical shocks, physical damage, slag, open flames, sparks, and arcs.
- Install cylinders in an upright position by securing to a stationary support or cylinder rack to prevent falling or tipping.
- Keep cylinders away from any welding or other electrical circuits.
- Never drape a welding torch over a gas cylinder.
- Never allow a welding electrode to touch any cylinder.
- Never weld on a pressurized cylinder – explosion will result.
- Use only correct shielding gas cylinders, regulators, hoses, and fittings designed for the specific application; maintain them and associated parts in good condition.
- Turn face away from valve outlet when opening cylinder valve.
- Keep protective cap in place over valve except when cylinder is in use or connected for use.
- Use the right equipment, correct procedures, and sufficient number of persons to lift and move cylinders.
- Read and follow instructions on compressed gas cylinders, associated equipment, and Compressed Gas Association (CGA) publication P-1 listed in Safety Standards.

1-3. Additional Symbols For Installation, Operation, And Maintenance

FIRE OR EXPLOSION hazard.

- Do not install or place unit on, over, or near combustible surfaces.
- Do not install unit near flammables.
- Do not overload building wiring – be sure power supply system is properly sized, rated, and protected to handle this unit.

FALLING EQUIPMENT can injure.

- Use lifting eye to lift unit only, NOT running gear, gas cylinders, or any other accessories.
- Use equipment of adequate capacity to lift and support unit.
- If using lift forks to move unit, be sure forks are long enough to extend beyond opposite side of unit.
- Keep equipment (cables and cords) away from moving vehicles when working from an aerial location.
- Follow the guidelines in the Applications Manual for the Revised NIOSH Lifting Equation (Publication No. 94–110) when manually lifting heavy parts or equipment.

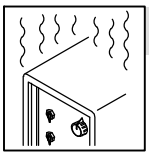

OVERUSE can cause OVERHEATING

- Allow cooling period; follow rated duty cycle.
- Reduce current or reduce duty cycle before starting to weld again.
- Do not block or filter airflow to unit.

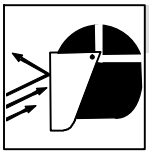

FLYING SPARKS can injure.

- Wear a face shield to protect eyes and face.
- Shape tungsten electrode only on grinder with proper guards in a safe location wearing proper face, hand, and body protection.
- Sparks can cause fires — keep flammables away.

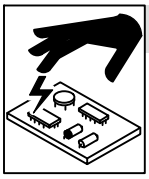

STATIC (ESD) can damage PC boards.

- Put on grounded wrist strap BEFORE handling boards or parts.
- Use proper static-proof bags and boxes to store, move, or ship PC boards.

MOVING PARTS can injure.

- Keep away from moving parts.
- Keep away from pinch points such as drive rolls.

WELDING WIRE can injure.

- Do not press gun trigger until instructed to do so.
- Do not point gun toward any part of the body, other people, or any metal when threading welding wire.

MOVING PARTS can injure.

- Keep away from moving parts such as fans.
- Keep all doors, panels, covers, and guards closed and securely in place.
- Have only qualified persons remove doors, panels, covers, or guards for maintenance and troubleshooting as necessary.
- Reinstall doors, panels, covers, or guards when maintenance is finished and before reconnecting input power.

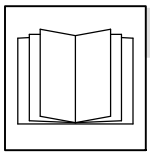

READ INSTRUCTIONS.

- Read and follow all labels and the Owner's Manual carefully before installing, operating, or servicing unit. Read the safety information at the beginning of the manual and in each section.
- Use only genuine replacement parts from the manufacturer.
- Perform maintenance and service according to the Owner's Manuals, industry standards, and national, state, and local codes.

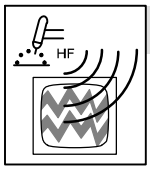

H.F. RADIATION can cause interference.

- High-frequency (H.F.) can interfere with radio navigation, safety services, computers, and communications equipment.
- Have only qualified persons familiar with electronic equipment perform this installation.
- The user is responsible for having a qualified electrician promptly correct any interference problem resulting from the installation.
- If notified by the FCC about interference, stop using the equipment at once.
- Have the installation regularly checked and maintained.
- Keep high-frequency source doors and panels tightly shut, keep spark gaps at correct setting, and use grounding and shielding to minimize the possibility of interference.

ARC WELDING can cause interference.

- Electromagnetic energy can interfere with sensitive electronic equipment such as computers and computer-driven equipment such as robots.
- Be sure all equipment in the welding area is electromagnetically compatible.
- To reduce possible interference, keep weld cables as short as possible, close together, and down low, such as on the floor.
- Locate welding operation 100 meters from any sensitive electronic equipment.
- Be sure this welding machine is installed and grounded according to this manual.
- If interference still occurs, the user must take extra measures such as moving the welding machine, using shielded cables, using line filters, or shielding the work area.

1-4. California Proposition 65 Warnings

Welding or cutting equipment produces fumes or gases which contain chemicals known to the State of California to cause birth defects and, in some cases, cancer. (California Health & Safety Code Section 25249.5 et seq.)

Battery posts, terminals and related accessories contain lead and lead compounds, chemicals known to the State of California to cause cancer and birth defects or other reproductive harm. *Wash hands after handling.*

This product contains chemicals, including lead, known to the state of California to cause cancer, birth defects, or other reproductive harm. *Wash hands after use.*

For Gasoline Engines:

Engine exhaust contains chemicals known to the State of California to cause cancer, birth defects, or other reproductive harm.

For Diesel Engines:

Diesel engine exhaust and some of its constituents are known to the State of California to cause cancer, birth defects, and other reproductive harm.

1-5. Principal Safety Standards

Safety in Welding, Cutting, and Allied Processes, ANSI Standard Z49.1, from Global Engineering Documents (phone: 1-877-413-5184, website: www.global.ihs.com).

Safe Practices for the Preparation of Containers and Piping for Welding and Cutting, American Welding Society Standard AWS F4.1, from Global Engineering Documents (phone: 1-877-413-5184, website: www.global.ihs.com).

National Electrical Code, NFPA Standard 70, from National Fire Protection Association, Quincy, MA 02269 (phone: 1-800-344-3555, website: www.nfpa.org and www. sparky.org).

Safe Handling of Compressed Gases in Cylinders, CGA Pamphlet P-1, from Compressed Gas Association, 4221 Walney Road, 5th Floor, Chantilly, VA 20151 (phone: 703-788-2700, website:www.cganet.com).

Safety in Welding, Cutting, and Allied Processes, CSA Standard W117.2, from Canadian Standards Association, Standards Sales, 5060 Spectrum Way, Suite 100, Ontario, Canada L4W 5NS (phone: 800-463-6727, website: www.csa-international.org).

Safe Practice For Occupational And Educational Eye And Face Protection, ANSI Standard Z87.1, from American National Standards Institute, 25 West 43rd Street, New York, NY 10036 (phone: 212-642-4900, website: www.ansi.org).

Standard for Fire Prevention During Welding, Cutting, and Other Hot Work, NFPA Standard 51B, from National Fire Protection Association, Quincy, MA 02269 (phone: 1-800-344-3555, website: www.nfpa.org.

OSHA, Occupational Safety and Health Standards for General Industry, Title 29, Code of Federal Regulations (CFR), Part 1910, Subpart Q, and Part 1926, Subpart J, from U.S. Government Printing Office, Superintendent of Documents, P.O. Box 371954, Pittsburgh, PA 15250-7954 (phone: 1-866-512-1800) (there are 10 OSHA Regional Offices—phone for Region 5, Chicago, is 312-353-2220, website: www.osha.gov).

U.S. Consumer Product Safety Commission (CPSC), 4330 East West Highway, Bethesda, MD 20814 (phone: 301-504-7923, website: www.cpsc.gov).

Applications Manual for the Revised NIOSH Lifting Equation, The National Institute for Occupational Safety and Health (NIOSH), 1600 Clifton Rd, Atlanta, GA 30333 (phone: 1-800-232-4636, website: www.cdc.gov/NIOSH).

1-6. EMF Information

Electric current flowing through any conductor causes localized electric and magnetic fields (EMF). Welding current creates an EMF field around the welding circuit and welding equipment. EMF fields may interfere with some medical implants, e.g. pacemakers. Protective measures for persons wearing medical implants have to be taken. For example, access restrictions for passers–by or individual risk assessment for welders. All welders should use the following procedures in order to minimize exposure to EMF fields from the welding circuit:

1. Keep cables close together by twisting or taping them, or using a cable cover.
2. Do not place your body between welding cables. Arrange cables to one side and away from the operator.
3. Do not coil or drape cables around your body.
4. Keep head and trunk as far away from the equipment in the welding circuit as possible.
5. Connect work clamp to workpiece as close to the weld as possible.
6. Do not work next to, sit or lean on the welding power source.
7. Do not weld whilst carrying the welding power source or wire feeder.

About Implanted Medical Devices:

Implanted Medical Device wearers should consult their doctor and the device manufacturer before performing or going near arc welding, spot welding, gouging, plasma arc cutting, or induction heating operations. If cleared by your doctor, then following the above procedures is recommended.

SECTION 2 – DEFINITIONS

2-1. Warning Label Definitions

A. Warning! Watch Out! There are possible hazards as shown by the symbols.

1 Electric shock from welding electrode or wiring can kill.

1.1 Wear dry insulating gloves. Do not touch electrode with bare hand. Do not wear wet or damaged gloves.

1.2 Protect yourself from electric shock by insulating yourself from work and ground.

1.3 Disconnect input plug or power before working on machine.

2 Breathing welding fumes can be hazardous to your health.

2.1 Keep your head out of the fumes.

2.2 Use forced ventilation or local exhaust to remove the fumes.

2.3 Use ventilating fan to remove fumes.

3 Welding sparks can cause explosion or fire.

3.1 Keep flammables away from welding. Do not weld near flammables.

3.2 Welding sparks can cause fires. Have a fire extinguisher nearby, and have a watchperson ready to use it.

3.3 Do not weld on drums or any closed containers.

4 Arc rays can burn eyes and injure skin.

4.1 Wear hat and safety glasses. Use ear protection and button shirt collar. Use welding helmet with correct shade of filter. Wear complete body protection.

5 Become trained and read the instructions before working on the machine or welding.

6 Do not remove or paint over (cover) the label.

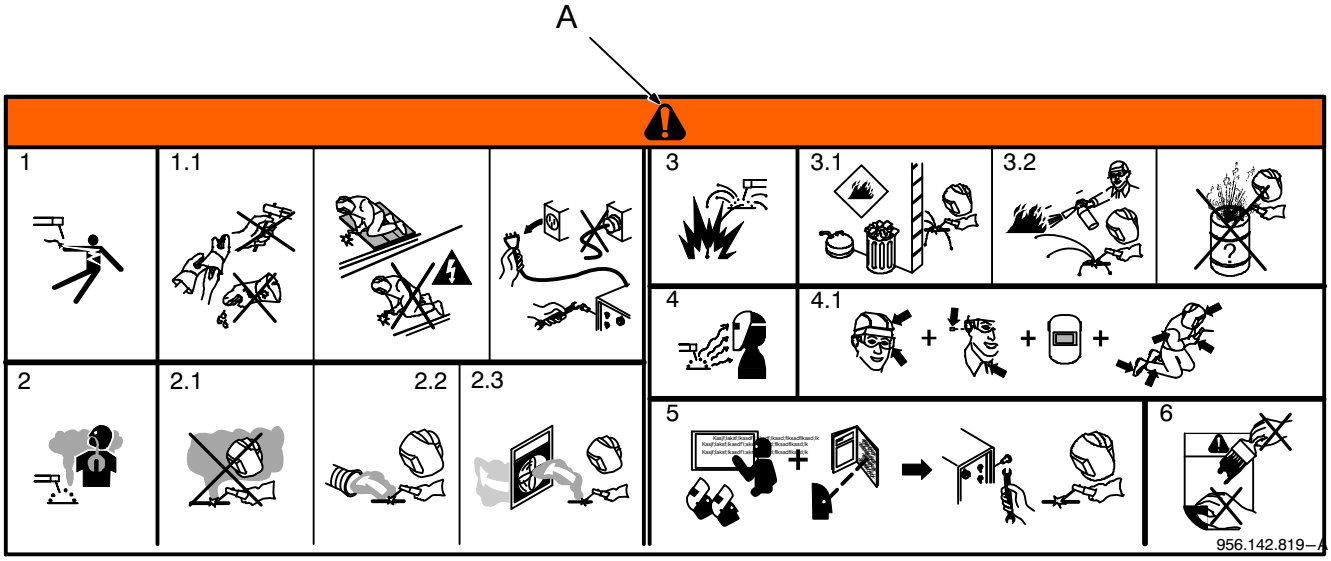

2-2. Symbols And Definitions

A	Amperes	V	Voltage Input	S	Suitable For Areas Of Increased Shock Hazard		Shielded Metal Arc Welding (SMAW)
V	Volts		Increase/Decrease Of Quantity		Single Phase Static Frequency Converter-Transformer-Rectifier		
	Output	—	Negative	+	Positive	Hz	Hertz
	Gas Input		High Temperature	═	Direct Current		Line Connection
%	Percent	X	Duty Cycle	U_1	Primary Voltage	U_2	Conventional Load Voltage
∿	Alternating Current	U_0	Rated No Load Voltage (Average)	I_{1max}	Rated Maximum Supply Current	I_2	Rated Welding Current
I_{1eff}	Maximum Effective Supply Current		Remote		Lift-Arc Start (GTAW)		Gas Tungsten Arc Welding (GTAW)
	Process		TIG (GTAW) Pulse		HF Impulse Starting (GTAW)	I	On
O	Off		Look under unit for label	t	Initial Slope Time	t	Final Slope Time
	Pre Flow And Post Flow Time	%	Initial Amps And Final Amps	Ab	Amps Background		Set-Up
1∿	Single Phase						

2-3. WEEE Label (For Products Sold Within The EU)

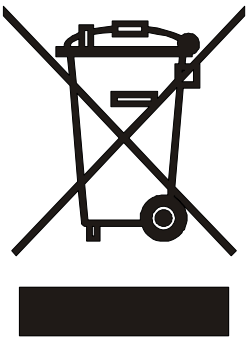

Do not discard product (where applicable) with general waste.

Reuse or recycle Waste Electrical and Electronic Equipment (WEEE) by disposing at a designated collection facility.

Contact your local recycling office or your local distributor for further information.

SECTION 3 – SPECIFICATIONS AND INSTALLATION

3-1. Important Information Regarding CE Products (Sold Within The EU)

A. Information On Electromagnetic Fields (EMF)

This equipment shall not be used by the general public as the EMF limits for the general public might be exceeded during welding.

This equipment is built in accordance with EN 60974–1 and is intended to be used only in an occupational environment (where the general public access is prohibited or regulated in such a way as to be similar to occupational use) by an expert or an instructed person.

Wire feeders and ancillary equipment (such as torches, liquid cooling systems and arc striking and stabilizing devices) as part of the welding circuit may not be a major contributor to the EMF. See the Owner's Manuals for all components of the welding circuit for additional EMF exposure information.

- The EMF assessment on this equipment was conducted at 0.5 meter.
- At a distance of 1 meter the EMF exposure values were less than 20% of the permissible values.

B. Information On Electromagnetic Compatibility (EMC)

This Class A equipment is not intended for use in residential locations where the electrical power is provided by the public low voltage supply system. There may be potential difficulties in ensuring electromagnetic compatibility in those locations, due to conducted as well as radiated disturbances.

This equipment does not comply with IEC 61000–3–12. If it is connected to a public low voltage system, it is the responsibility of the installer or user of the equipment to ensure, by consultation with the distribution network operator if necessary, that the equipment may be connected.

ce-emc 2 2010-10

3-2. Serial Number And Rating Label Location

The serial number and rating information is located on the bottom of the machine. Use the rating labels to determine input power requirements and/or rated output. CE model rating labels will also display the following symbols: CE, CCC, WEEE, and IEC 60974-1. For future reference, write serial number in space provided on back cover of this manual.

3-3. Specifications

Model	Input Power Single-Phase AC	Rated Welding Output	Welding Amperage Range	Max OCV DC (Uo)	Amperes Input At Rated Load Output, 50/60Hz, Single-Phase	KVA/KW @ Duty Cycle	Weight	Dimensions
Si 160	230 Volts Stick	100A @ 24 Volts DC, 100% Duty Cycle	15–150A	85V	20A	4.5/2.8	5.2 Kg (11.5 lb)	L = 380 mm W = 145 mm H = 245 mm
		150A @ 26 Volts DC, 25% Duty Cycle			30A	7.0/4.8		
	230 Volts TIG	100A @ 14 Volts DC, 100% Duty Cycle	15–150A	85V	13A	3.0/2.0		
		150A @ 16 Volts DC, 25% Duty Cycle			21A	4.8/3.2		
STi 160	230 Volts Stick	100A @ 24 Volts DC, 100% Duty Cycle	4–150A	70V	20A	4.5/2.8	6.0 Kg (13.2 lb)	L = 380 mm W = 145 mm H = 245 mm
		150A @ 26 Volts DC, 25% Duty Cycle			30A	7.0/4.8		
	230 Volts TIG	100A @ 14 Volts DC, 100% Duty Cycle	4–160A	70V	13A	3.0/2.0		
		160A @ 16.4 Volts DC, 20% Duty Cycle			22A	5.1/3.5		
STH 160	230 Volts Stick	100A @ 24 Volts DC, 100% Duty Cycle	4–150A	70V	20A	4.5/2.8	6.0 Kg (13.2 lb)	L = 380 mm W = 145 mm H = 245 mm
		150A @ 26 Volts DC, 25% Duty Cycle			30A	7.0/4.8		
	230 Volts TIG	100A @ 14 Volts DC, 100% Duty Cycle	4–160A	70V	13A	3.0/2.0		
		160A @ 16.4 Volts DC, 20% Duty Cycle			22A	5.1/3.5		

3-4. Selecting A Location

Airflow Distance Requirements

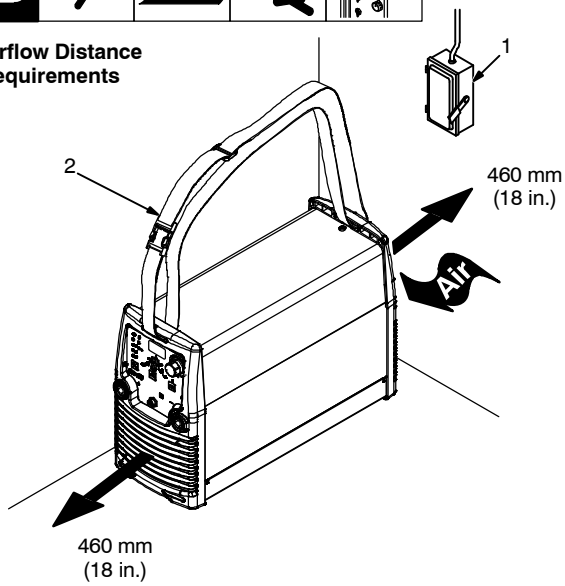

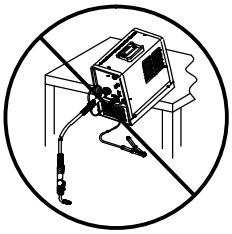

Do not move or operate unit where it could tip.

1 Line Disconnect Device

Locate unit near correct input power supply.

2 Welding Power Source Shoulder Strap

Use strap to lift unit.

Special installation may be required where gasoline or volatile liquids are present – see NEC Article 511 or CEC Section 20.

956142809_1-6_B

3-5. Volt-Ampere Curves

Volt-ampere curves show minimum and maximum voltage and amperage output capabilities of welding power source. Curves of other settings fall between curves shown.

Si 160 Max Output – 150 A; Si 160 Min Output – 15 A

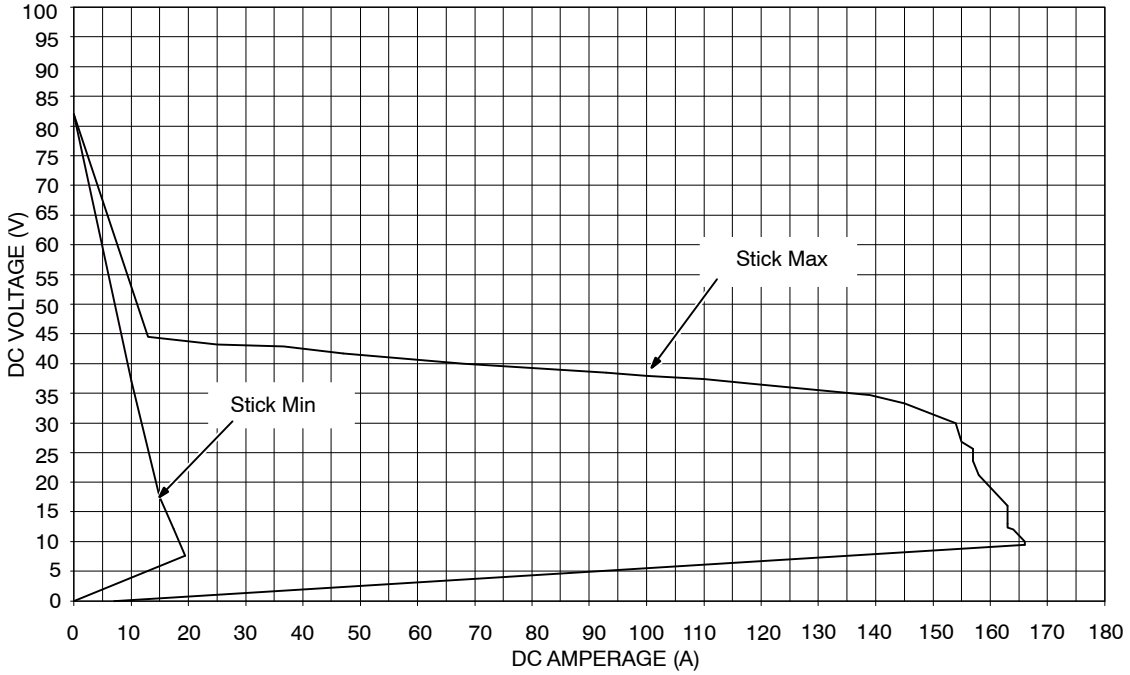

Sti 160 And STH 160 Max Output – 160 A; Sti 160 And STH 160 Min Output – 4 A

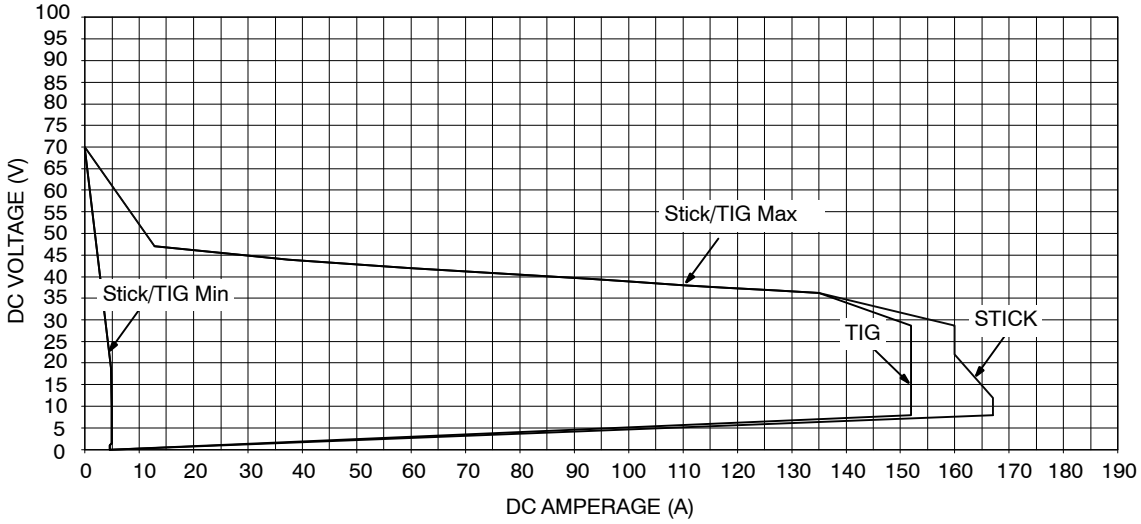

3-6. Duty Cycle And Overheating

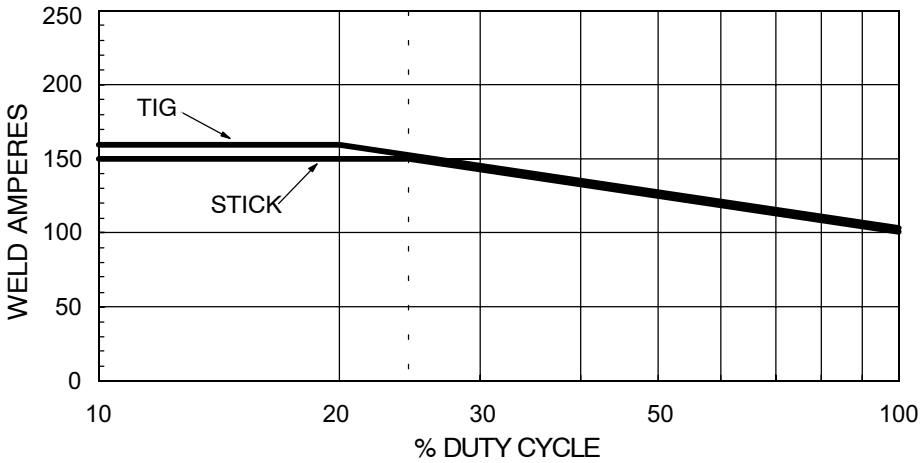

Duty Cycle is percentage of 10 minutes that unit can weld at rated load without overheating.

If unit overheats, output stops, the Overtemperature Light comes On, and the cooling fan runs. Wait fifteen minutes for unit to cool. Reduce amperage or duty cycle before starting to weld again.

NOTICE *– Exceeding duty cycle can damage unit and void warranty.*

3-7. Remote 6 Receptacle Information (STL And STH Models Only)

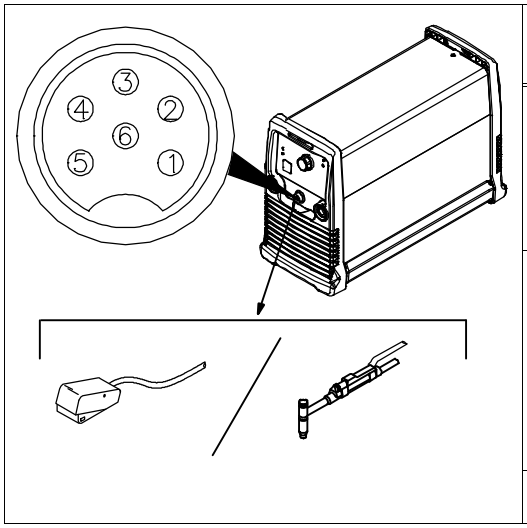

REMOTE 6	Socket	Socket Information
15 VOLTS DC OUTPUT CONTACTOR	1	Contactor control +13.8 volts DC.
	2	Contact closure to 1 completes contactor control circuit and enables output when Lift-Arc TIG remote is selected.
REMOTE OUTPUT CONTROL	3	Output to remote control; +10 volts DC output to remote control.
	4	0 to +10 volts DC input command signal from remote control.
	5	Remote control circuit common.
CHASSIS	6	Chassis common.

3-8. Electrical Service Guide

Failure to follow these electrical service guide recommendations could create an electric shock or fire hazard. These recommendations are for a dedicated branch circuit sized for the rated output and duty cycle of the welding power source.

	Si 160	Sti 160	STH 160
Input Voltage (V)	230	230	230
Input Amperes (A) At Rated Output	30	30	30
Max Recommended Standard Fuse Rating In Amperes [1]			
Time-Delay Fuses [2]	35	35	35
Normal Operating Fuses [3]	45	45	45
Min Input Conductor Size In mm^2 (AWG) [4]	4 (12)	4 (12)	4 (12)
Max Recommended Input Conductor Length In Meters (Feet)	24 (80)	24 (80)	24 (80)
Min Grounding Conductor Size In mm^2 (AWG) [4]	4 (12)	4 (12)	4 (12)

Reference: 2008 National Electrical Code (NEC) (including article 630)

1 If a circuit breaker is used in place of a fuse, choose a circuit breaker with time-current curves comparable to the recommended fuse.

2 “Time-Delay” fuses are UL class “RK5” . See UL 248.

3 “Normal Operating” (general purpose - no intentional delay) fuses are UL class “K5” (up to and including 60 amps), and UL class “H” (65 amps and above).

4 Conductor data in this section specifies conductor size (excluding flexible cord or cable) between the panelboard and the equipment per NEC Table 310.16. If a flexible cord or cable is used, minimum conductor size may increase. See NEC Table 400.5(A) for flexible cord and cable requirements.

Notes

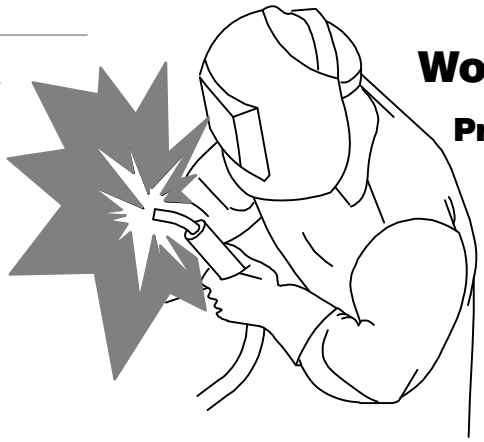

Work like a Pro!

Pros weld and cut safely. Read the safety rules at the beginning of this manual.

3-9. Connecting 1-Phase Input Power For 230 VAC

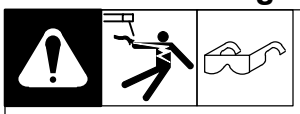

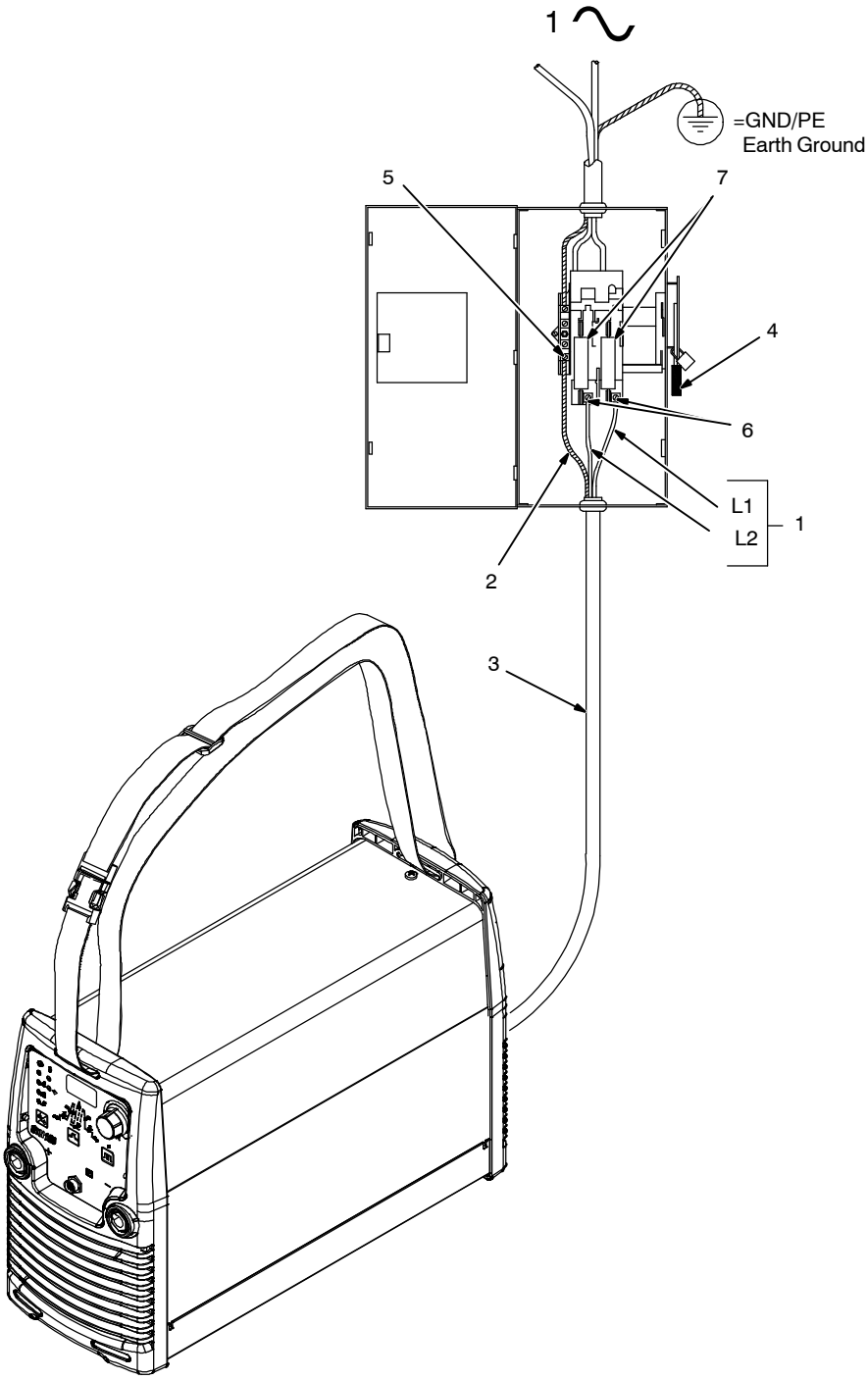

Installation must meet all National and Local Codes – have only qualified persons make this installation.

Disconnect and lockout/tagout input power before connecting input conductors from unit.

Always connect green or green/yellow conductor to supply grounding terminal first, and never to a line terminal.

1 Black And White Input Conductor (L1 And L2)

2 Green Or Green/Yellow Grounding Conductor

3 Input Power Cord.

4 Disconnect Device (switch shown in the OFF position)

5 Disconnect Device Grounding Terminal

6 Disconnect Device Line Terminals

Connect green or green/yellow grounding conductor to disconnect device grounding terminal first.

Connect input conductors L1 and L2 to disconnect device line terminals.

7 Over-Current Protection

Select type and size of over-current protection using Section 3-8 (fused disconnect switch shown).

Close and secure door on disconnect device. Remove lockout/tagout device, and place switch in the On position.

Tools Needed:

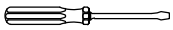

956142809_1-6_B / 956142809_2-6_B

4-1. Controls For Si 160

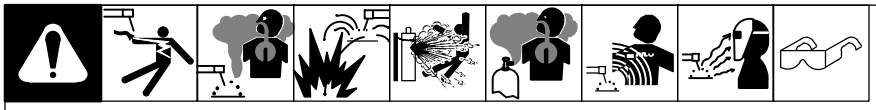

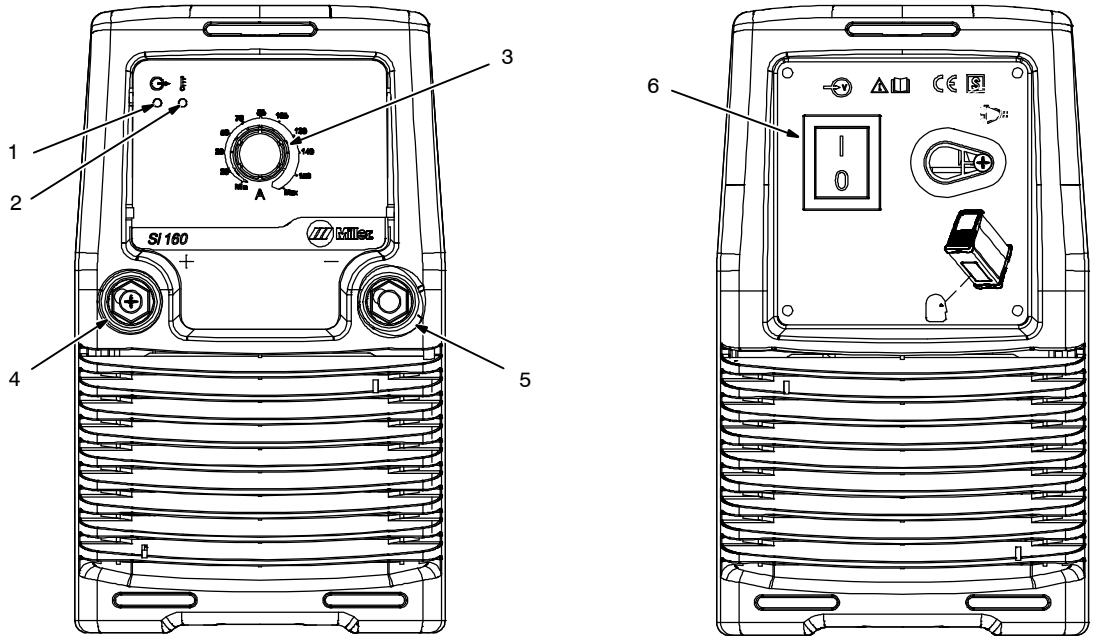

956142809_3-6_D

Weld output terminals are energized when power is On and Ready Light (LED) is lit.

1 Ready Light (LED)

Light comes on approximately two seconds after power switch is placed in On (I) position if Stick has been selected. The light indicates that the unit is energized and ready for welding.

2 High Temperature Light (LED)

Light comes on if unit overheats. Welding can resume when unit has cooled (see Section 3-6).

3 Amperage Adjustment Control

See Section 4-2.

4 Positive Weld Output Receptacle

For Stick welding, connect electrode cable to this receptacle.

5 Negative Weld Output Receptacle

For Stick welding, connect work cable to this receptacle.

6 Power Switch

Place switch in On (I) position to turn unit on. Place switch in Off (0) position to turn unit off.

4-2. Amperage Adjustment Control

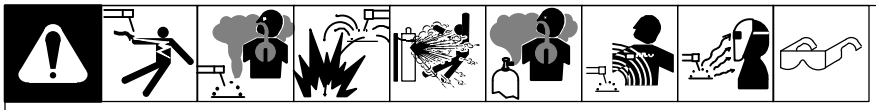

1 Amperage Adjustment Control

Rotate knob clockwise to increase amperage (Min – Max).

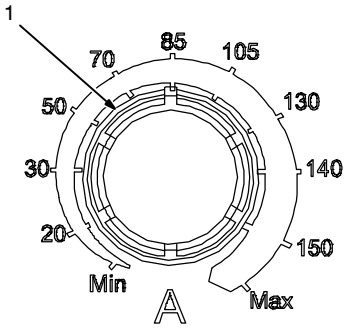

4-3. Preparing Unit For Stick Welding (Si Model)

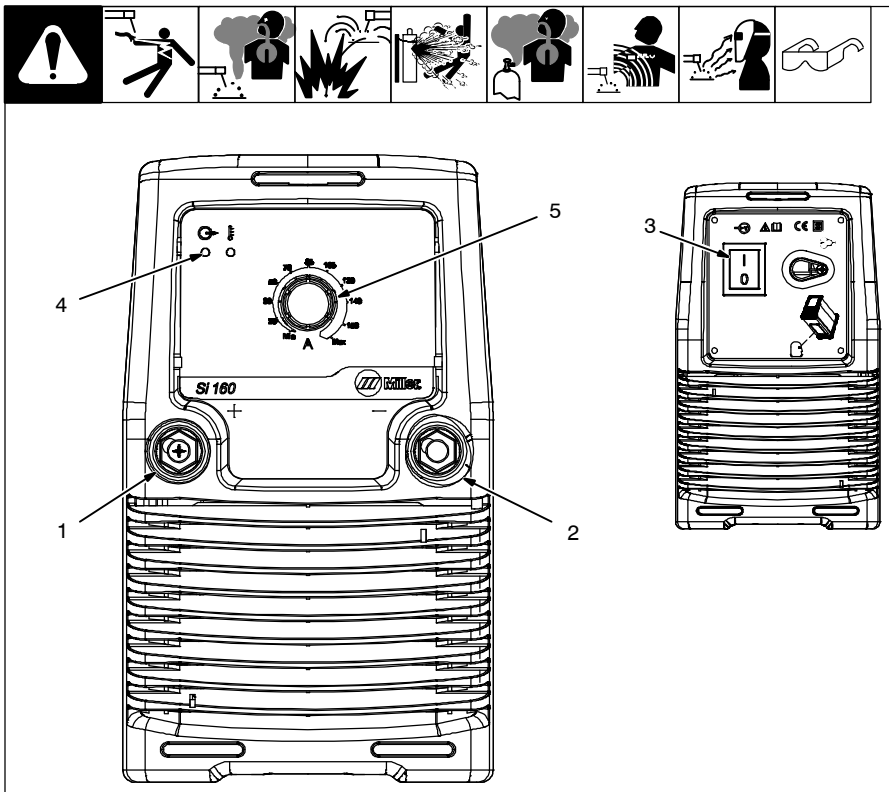

Weld output terminals are energized when power is On, and Ready Light is lit.

1 Positive Weld Output Receptacle

Connect electrode cable to this receptacle.

2 Negative Weld Output Receptacle

Connect work cable to this receptacle.

3 Power Switch

Place switch in On (I) position.

4 Ready Light (LED)

Allow time for unit to complete its start up cycle. Light comes on approximately two seconds after power switch is placed in On (I) position. The light indicates that the unit is energized and ready for welding.

5 Amperage Adjustment Control

Set amperage, see Section 4-2.

956142809_3-6_D

Notes

4-4. Controls For STi 160

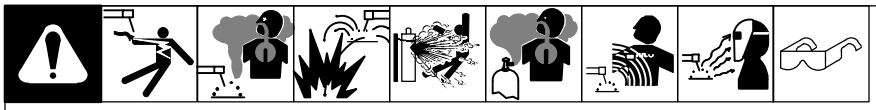

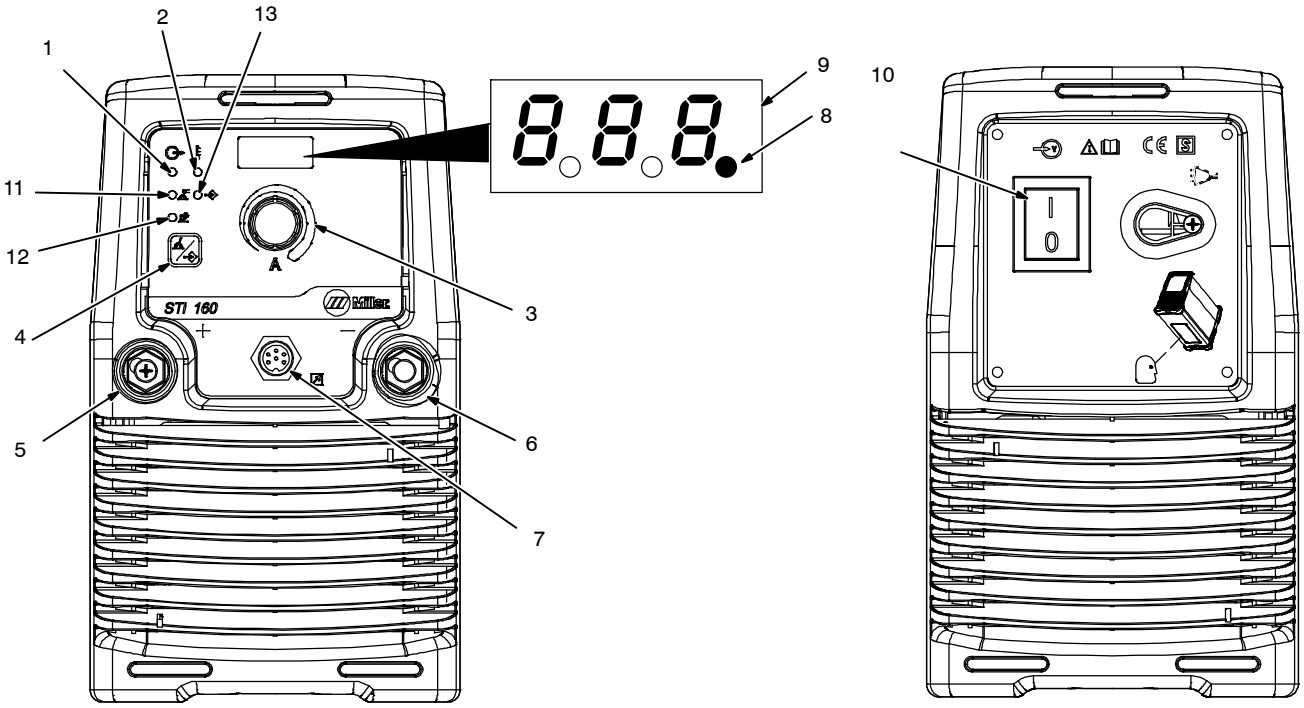

956142809_3-6_D

Weld output terminals are energized when power is On, and Ready Light is lit.

1 Ready Light (LED)

Light comes on approximately two seconds after power switch is placed in On (I) position. The light indicates that the unit is energized and ready for welding.

2 High Temperature Light (LED)

Light comes on if unit overheats. Welding can resume when unit has cooled (see Section 3-6).

3 Amperage/Set-Up Adjustment Control

Use control to adjust welding amperage and change values while in the set-up mode.

4 Process/Set-Up Selector Switch

See Section 4-5 and/or 4-6

5 Positive Weld Output Receptacle

For Stick welding, connect electrode cable to this receptacle. For TIG welding, connect work cable to this receptacle.

6 Negative Weld Output Receptacle

For Stick welding, connect work cable to this receptacle. For TIG welding, connect torch to this receptacle.

7 Remote Control Receptacle

Connect remote control to receptacle (see Section 3-7). For TIG and Stick welding, output may be adjusted from min to max of the front panel setting with the remote control.

8 Remote Control Pixel

Pixel flashes when a remote control is connected to the remote control receptacle.

☞ *When a foot or finger remote control is connected , remote trigger is not enabled. Only amperage adjustment is controlled by the remote control and by the Amperage/ Set-up Adjustment control.*

9 Ammeter And Parameter Display (Meter)

Meter displays actual amperage while welding. Meter also displays preset parameters for any of the following: time, set-up, and overheating alarm.

10 Power Switch

Place switch in On (I) position to turn unit on. Place switch in Off (0) position to turn unit off. Upon power up, unit will recall and display the last welding procedure, or factory default procedure (see Section 4-14).

11 Stick Welding Light (LED)

See Section 4-5).

12 TIG Lift Arc Start Light (LED)

See Section 4-6).

13 Set-Up Light (LED)

4-5. Preparing Unit For Stick Welding (STi Model)

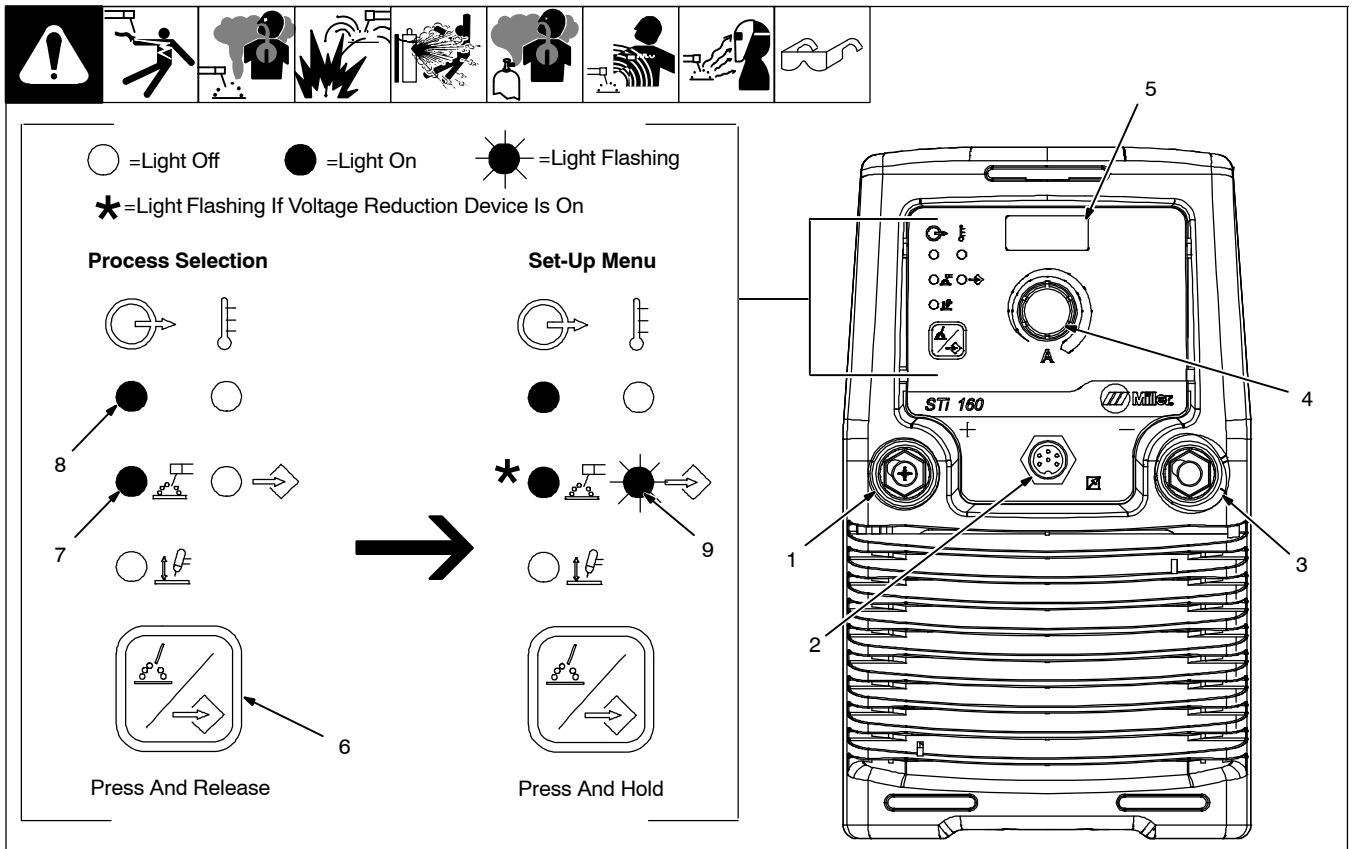

Weld output terminals are energized when power is On, and Ready Light is lit.

1 Positive Weld Output Terminal
2 Remote Control Receptacle
3 Negative Weld Output Terminal
4 Amperage/Set-Up Adjustment Control
5 Ammeter And Parameter Display (Meter)
6 Process/Set-Up Selector Switch
7 Stick Welding Light (LED)
8 Ready Light (LED)
9 Set-Up Light (LED)

Prepare unit for Stick welding as follows:

Connect electrode holder to positive weld output receptacle.

Connect work clamp to negative weld output terminal.

If desired, connect an optional remote control to the remote control receptacle to remotely control weld amperage.

Turn power on. Allow time for unit to complete its start up cycle.

Press and release Amperage/Set-Up Adjustment control to select Stick welding and light corresponding LED. Display meter displays ARC for three seconds and then the factory default setting of 80 amperes.

Voltage Reduction Setting

To change voltage reduction setting, proceed as follows:

Press and hold Process/Set-Up Adjustment Control to enter set-up mode.

Upon entry, the Set-Up light begins to flash, and the display meter displays VRD.

Voltage Reduction default is Off. Use Amperage/Set-Up Adjustment control to enable or turn setting On.

When Voltage Reduction is enabled, Stick Welding light flashes continuously. VRD is set to 20 volts

☞ *Unit will automatically exit the set-up menu if no activity is detected for more than three seconds. Press and hold Process/Set-Up Adjustment control to re-enter set-up mode.*

Hot Start Setting

Use Hot Start to increase output amperage at the start of a weld to help prevent electrode sticking.

To change Hot Start setting, proceed as follows:

While in the set-up menu, press and release Process/Set-Up Selector switch. The Set-Up light will continue to flash.

The display meter will display HS.

Use the Amperage/Set-Up Adjustment control to change amperage from 0 to 50 percent of the preset amperage value, with 15 percent being the default value. The maximum Hot Start amperage value is 150 amps.

Example: If preset amperage is 90 amps, 0% = 90 amps, 50% = 135 amps.

Arc Force Setting:

Use Arc Force to increase short-circuit amperage at low arc voltage. Set at 0 for normal welding amperage. Turn control clockwise to increase short-circuit amperage.

To change Arc Force setting, proceed as follows:

While in the set-up menu, press and release the Process/Set-Up Selector switch. The Set-Up light continues to flash.

Use the Amperage/Set-Up Adjustment control to change amperage from 0 to 50 percent of the preset amperage value, with 15 percent being the default value. The maximum Arc Force setting is 150 amps.

Example: If preset amperage is 90 amps, 0% = 90 amps, 50% = 135 amps.

Anti Stick

Anti Stick prevents the electrode from sticking while welding.

This function is automatically active while using the Stick welding process. Anti Stick increases amperage when arc voltage is below ten volts for more than two seconds.

☞ *The amperage range while Stick welding is from 4 to 150 amps.*

4-6. Preparing Unit For TIG Welding (STi Model)

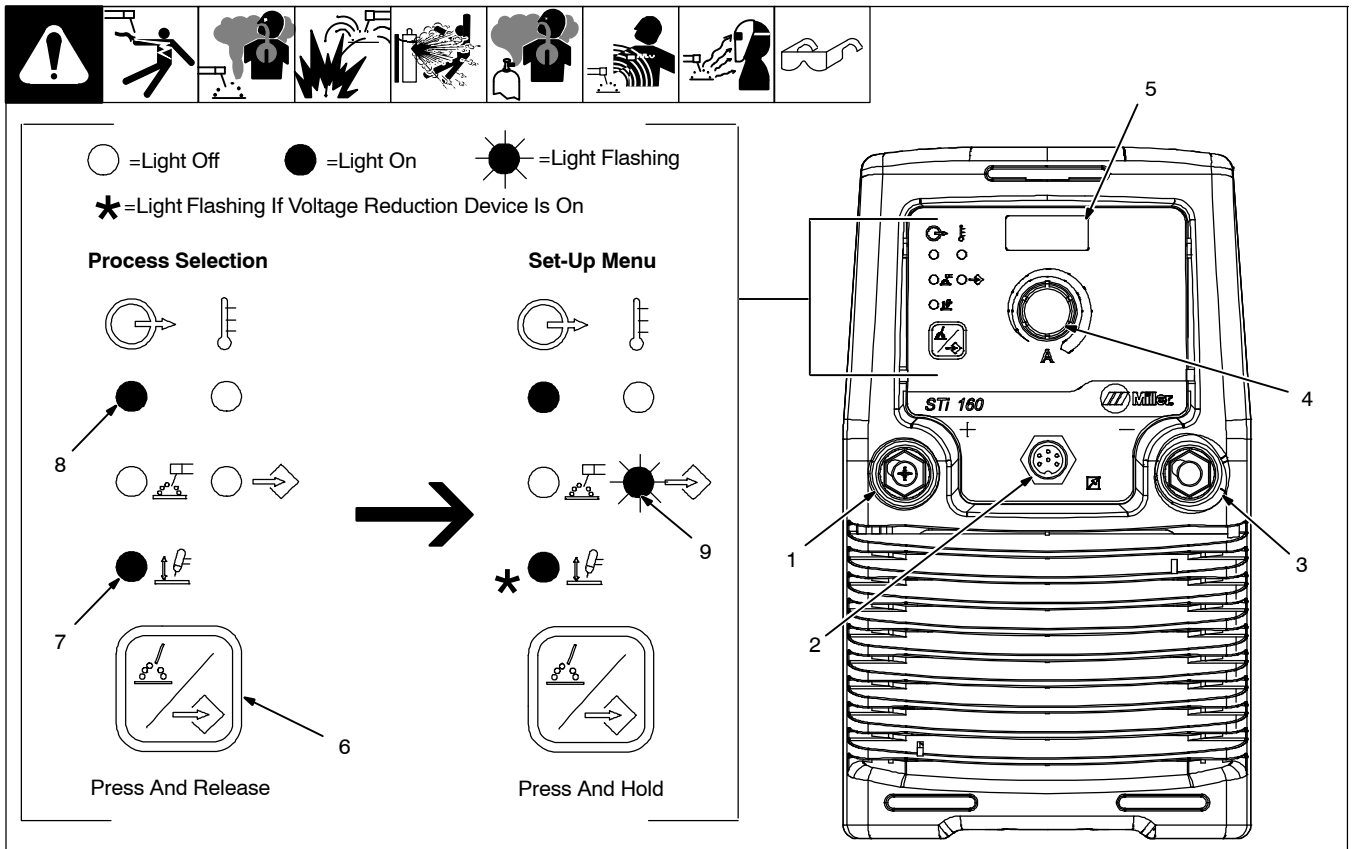

Weld output terminals are energized when power is On, and Ready Light is lit.

1 Positive Weld Output Terminal
2 Remote Control Receptacle
3 Negative Weld Output Terminal
4 Amperage/Set-Up Adjustment Control
5 Ammeter And Parameter Display (Meter)
6 Process/Set-Up Selector Switch
7 TIG Welding Light (LED)
8 Ready Light (LED)
9 Set-Up Light (LED)

Prepare unit for TIG welding as follows:

Connect electrode holder to negative weld output receptacle.

Connect work clamp to positive weld output terminal.

If desired, connect a remote control to the remote control receptacle.

Turn power on. Allow time for unit to complete its start up cycle.

Press and release Amperage/Set-Up Adjustment control to select TIG welding and light corresponding LED. Display meter displays TIG for three seconds and then the factory default setting of 50 amperes.

Voltage Reduction Setting

To change voltage reduction setting, proceed as follows:

Press and hold Amperage/Set-Up Adjustment Control to enter set-up mode.

Upon entry, the Set-Up light begins to flash, and the display meter displays VRD.

Voltage Reduction default is Off. Use Amperage/Set-Up Adjustment control to enable or turn setting On.

When Voltage Reduction is enabled, TIG Welding light flashes continuously. VRD is set to 20 volts.

☞ *Unit will automatically exit the set-up menu if no activity is detected for more than three seconds. Press and hold Amperage/Set-Up Adjustment control to re-enter set-up mode.*

Slope Down Setting

To change Slope Down setting, proceed as follows:

While in the set-up menu, press and release the Process/Set-Up Selector switch. The Set-up light continues to flash.

The display meter will display SL.

Use the Amperage/Set-Up Adjustment control to reduce amperage over a set period of time (0–10 seconds) at the end of the weld. The default setting is 0 seconds.

Application:

Slope Down should be used while TIG welding materials that are crack sensitive, and/or the operator wants to eliminate the crater at the end of the weld.

Anti Stick

Anti Stick prevents the electrode from sticking while welding.

This function is automatically active while using the TIG welding process. Anti Stick increases amperage when arc voltage is below four volts for more than two seconds.

☞ *The amperage range while TIG welding is from 4 to 160 amps.*

4-7. Controls For STH 160

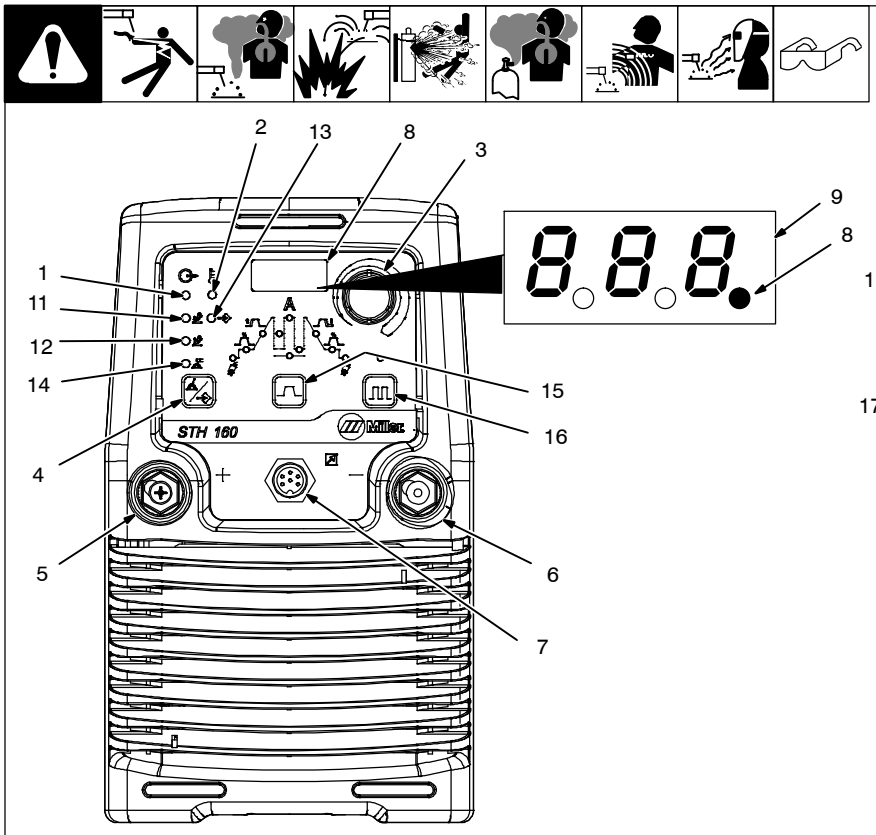

Weld output terminals are energized when power is On, and Ready Light is lit.

1 Ready Light (LED)

Light comes on approximately two seconds after power switch is placed in On (I) position if Lift-Arc™ or Stick has been selected. The light indicates that the unit is energized and ready for welding.

2 High Temperature Light (LED)

Light comes on if unit overheats. Welding can resume when unit has cooled.

3 Amperage/Set-Up Adjustment Control

Use control to adjust welding amperage and change values while in the set-up menu.

See Section 4-2.

4 Process/Set-Up Selector Switch

See Section 4-8 and/or 4-9.

5 Positive Weld Output Receptacle

For Stick welding, connect electrode cable to this receptacle. For TIG welding, connect work cable to this receptacle.

6 Negative Weld Output Receptacle

For Stick welding, connect work cable to this receptacle. For TIG welding, connect torch to this receptacle.

7 Remote Control Receptacle

Connect remote control to receptacle (see Section 3-7). For TIG and Stick welding, output may be adjusted from min to max of the front panel setting with the remote control.

☞ *When a foot or finger remote control is connected , remote trigger is enabled only in the TIG mode. Amperage adjustment is controlled by the remote control and Amperage/Set-up adjustment control.*

8 Remote Control Pixel

Pixel flashes when a remote control is connected to the remote control receptacle.

9 Ammeter And Parameter Display (Meter)

Meter displays actual amperage while welding. Meter also displays preset parameters for any of the following: time, set-up, and overheating alarm.

10 Power Switch

Place switch in On (I) position to turn unit on. Place switch in Off (0) position to turn unit off. Upon power up, unit will recall and display the last welding procedure, or factory default procedure (see Section 4-14).

11 TIG HF Start Light (LED)

See Section 4-15.

12 TIG Lift Arc Start Light (LED)

See Section 4-15).

13 Set-Up Light (LED)

14 Stick Welding Light (LED)

See section 4-8.

15 Sequencer Parameters Switch

See Section 4-12.

16 Pulse Control Switch

See Section 4-13.

17 Gas In Fitting

Connect hose from shielding gas supply regulator/flowmeter to gas in fitting. Fitting has ⅝-18 right-hand threads. See Section 4-10.

4-8. Preparing Unit For Stick Welding (STH Model)

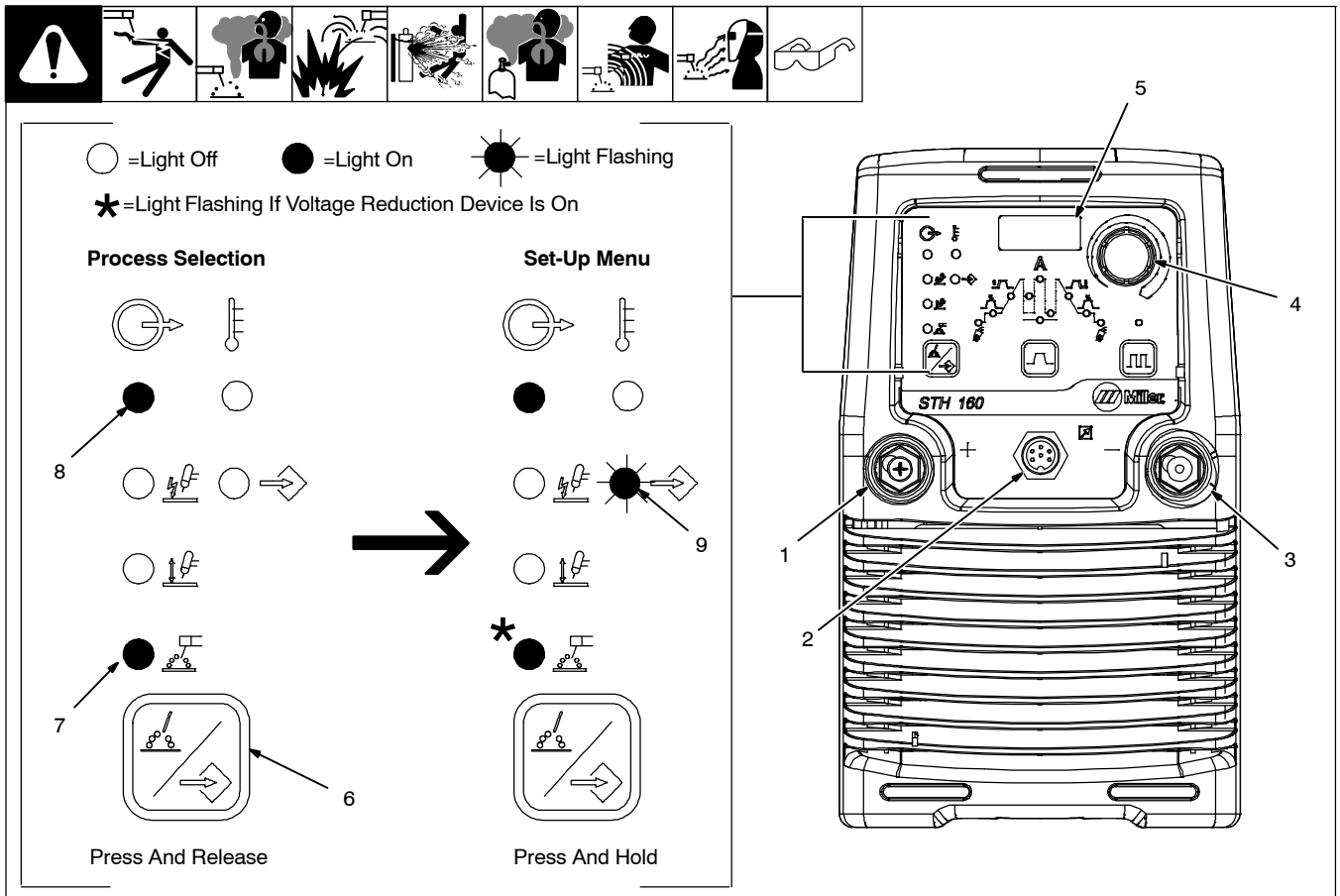

Weld output terminals are energized when power is On, and Ready Light is lit.

1 Positive Weld Output Terminal
2 Remote Control Receptacle
3 Negative Weld Output Terminal
4 Amperage/Set-Up Adjustment Control
5 Ammeter And Parameter Display (Meter)
6 Process/Set-Up Selector Switch
7 Stick Welding Light (LED)
8 Ready Light (LED)
9 Set-Up Light (LED)

Prepare unit for Stick welding as follows:

Connect electrode holder to positive weld output receptacle.

Connect work clamp to negative weld output terminal.

If desired, connect a remote control to the remote control receptacle.

Turn power on. Allow time for unit to complete its start up cycle.

Press and release Process/Set-Up Adjustment control to select Stick welding and light corresponding LED. Display meter displays ARC for three seconds and then the factory default setting of 80 amperes.

Voltage Reduction Setting

To change voltage reduction setting, proceed as follows:

Press and hold Process/Set-Up Adjustment Control to enter set-up mode.

Upon entry, the Set-Up light begins to flash, and the display meter displays VRD.

Voltage Reduction default is Off. Use Amperage/Set-Up Adjustment control to enable or turn setting On.

When Voltage Reduction is enabled, Stick Welding light flashes continuously. VRD is set to 20 volts.

☞ *Unit will automatically exit the set-up menu if no activity is detected for more than three seconds. Press and hold Process/Set-Up Adjustment control to re-enter set-up mode.*

Hot Start Setting

Use Hot Start to increase output amperage at the start of a weld to help prevent electrode sticking.

To change Hot Start setting, proceed as follows:

While in the set-up menu, press and release Process/Set-Up Selector switch. The Set-up light continues to flash.

The display meter will display HS.

Use the Amperage/Set-Up Adjustment control to change amperage from 0 to 50 percent of the preset amperage value, with 15 percent being the default value. The maximum Hot Start amperage value is 150 amps.

Example: If preset amperage is 90 amps, 0% = 90 amps, 50% = 135 amps.

Arc Force Setting:

Use Arc Force to increase short-circuit amperage at low arc voltage. Set at 0 for normal welding amperage. Turn control clockwise to increase short-circuit amperage.

To change Arc Force setting, proceed as follows:

While in the set-up menu, press and release the Process/Set-Up Selector switch. The Set-Up light continues to flash.

Use the Amperage/Set-Up Adjustment control to change amperage from 0 to 50 percent of the preset amperage value, with 15 percent being the default value. The maximum Arc Force setting is 150 amps.

Example: If preset amperage is 90 amps, 0% = 90 amps, 50% = 135 amps.

Anti Stick

Anti Stick prevents the electrode from sticking while welding.

This function is automatically active while using the Stick welding process. Anti Stick increases amperage when arc voltage is below ten volts for more than two seconds.

☞ *The amperage range while Stick welding is from 4 to 150 amps.*

4-9. Preparing Unit For TIG Welding (STH Model)

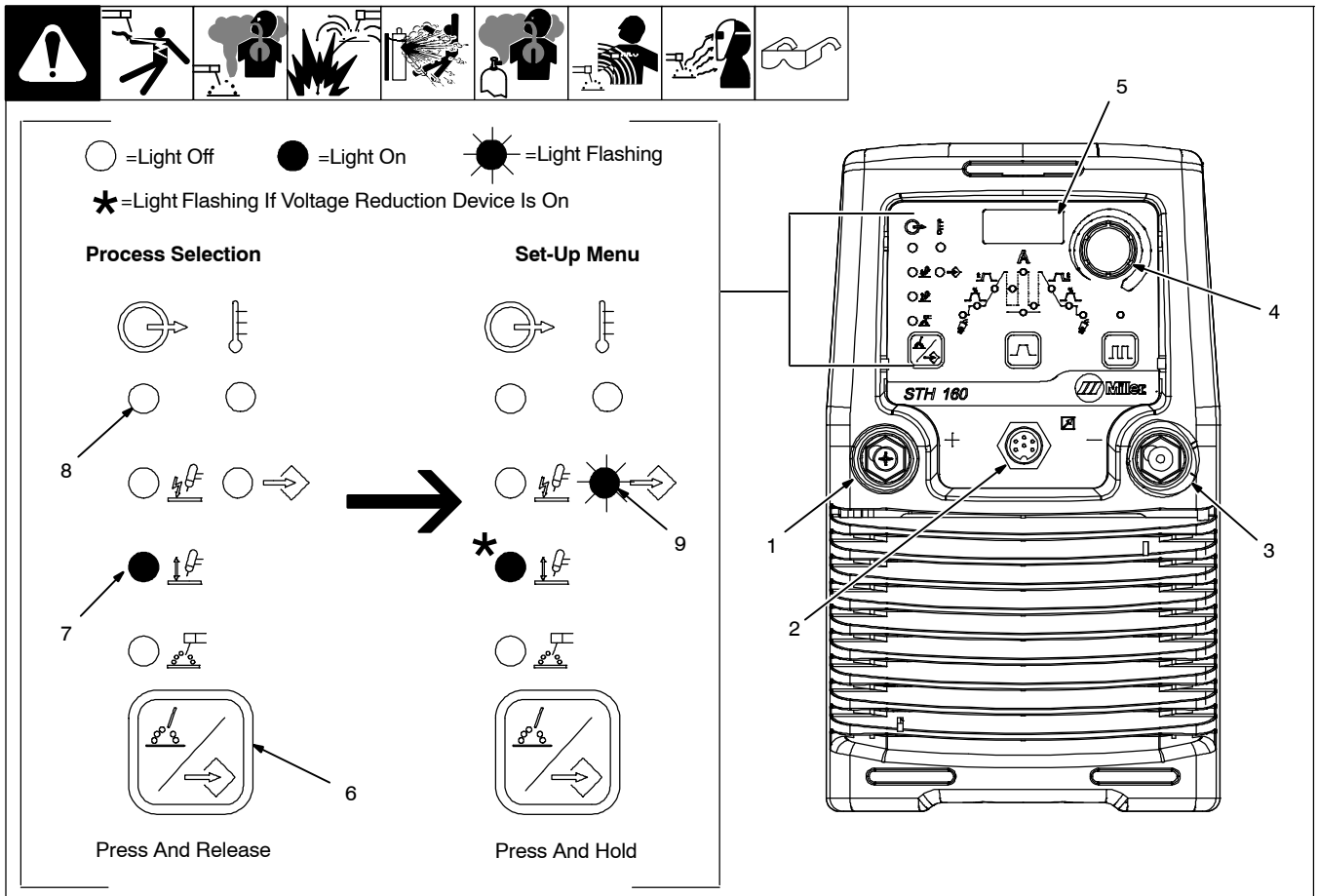

1 Positive Weld Output Terminal

2 Remote Control Receptacle

3 Negative Weld Output Terminal

4 Amperage/Set-Up Adjustment Control

5 Ammeter And Parameter Display (Meter)

6 Process/Set-Up Selector Switch

7 TIG Welding Light (LED)

8 Ready Light (LED)

9 Set-Up Light (LED)

Prepare unit for TIG welding as follows:

Connect electrode holder to negative weld output receptacle.

Connect work clamp to positive weld output terminal.

If desired, connect a remote control to the remote control receptacle.

Turn power on. Allow time for unit to complete its start up cycle.

Press and release Amperage/Set-Up Adjustment control to select TIG welding and light corresponding LED. Display meter displays TIG for three seconds and then the factory default setting of 50 amperes.

Anti Stick

Anti Stick prevents the electrode from sticking while welding.

This function is automatically active while using the TIG welding process. Anti Stick increases amperage when arc voltage is below four volts for more than two seconds.

☞ *The amperage range while TIG welding is from 4 to 160 amps.*

4-10. Gas Connections (STH Models)

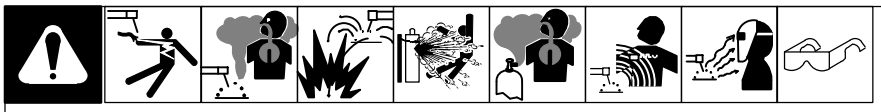

1 Remove cap, stand to side of valve, and open valve slightly. Gas flow blows dust and dirt from valve. Close valve.

2 Regulator/Flowmeter

Install so face is vertical.

3 Flow Adjust

Typical flow rate is 15 CFH (cubic feet per hour) (7.1 liters per minute).

Make sure flow adjust is closed when opening cylinder to avoid damage to the flowmeter.

4 Gas In Fitting

Connect hose from shielding gas supply regulator/flowmeter to gas in fitting. Fitting has 5/8-18 right-hand threads.

5 Gas Out Fitting

Connect shielding gas hose from torch to gas out fitting. Fitting has 3/8-19 BSPP right-hand threads.

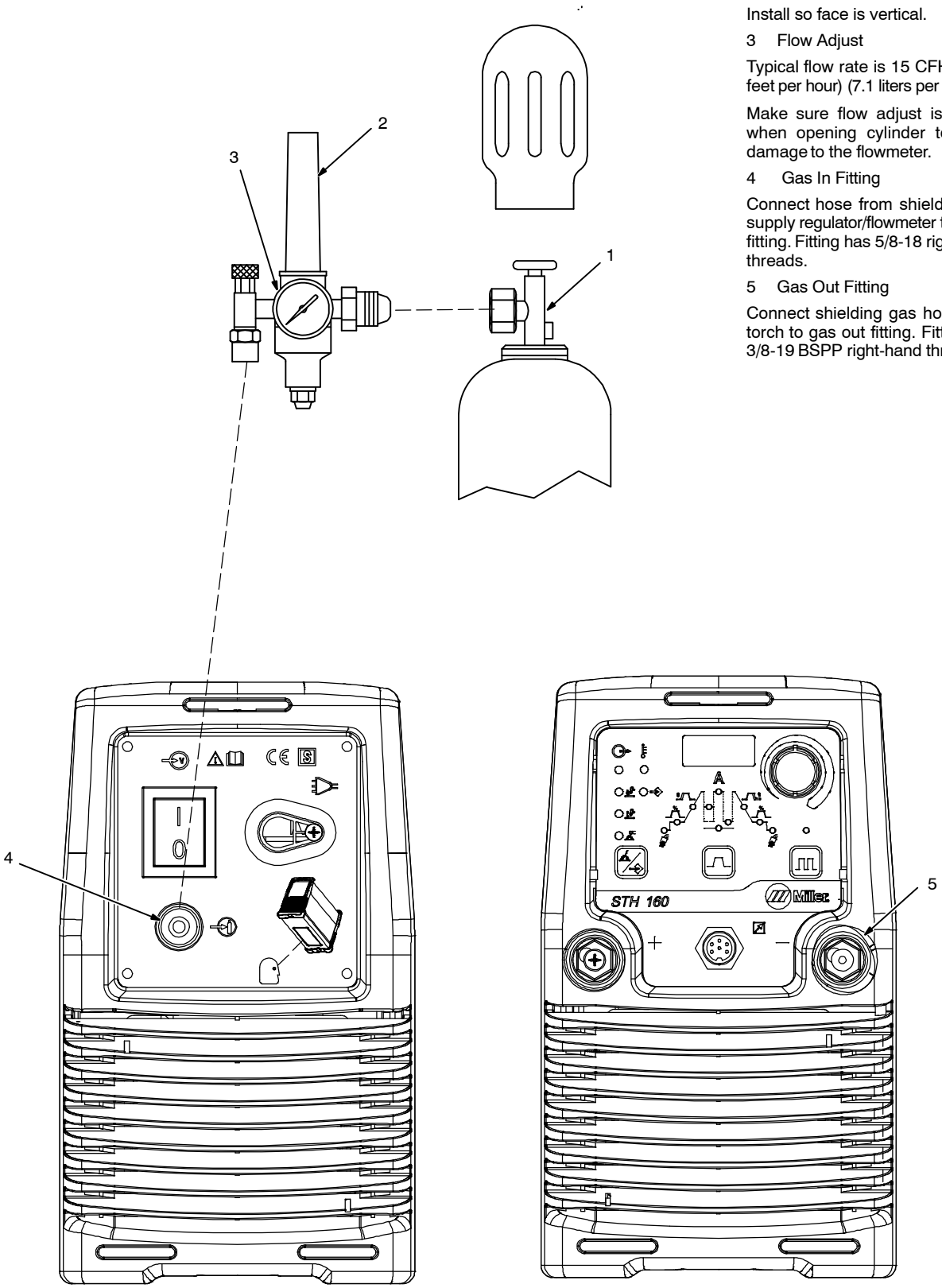

956142809_3-6_D

4-11. 2T Or 4T Trigger Mode Settings (STH Models)

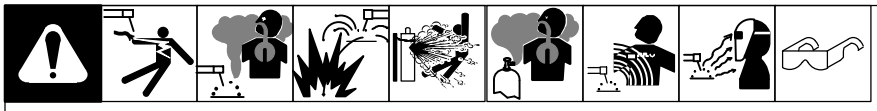

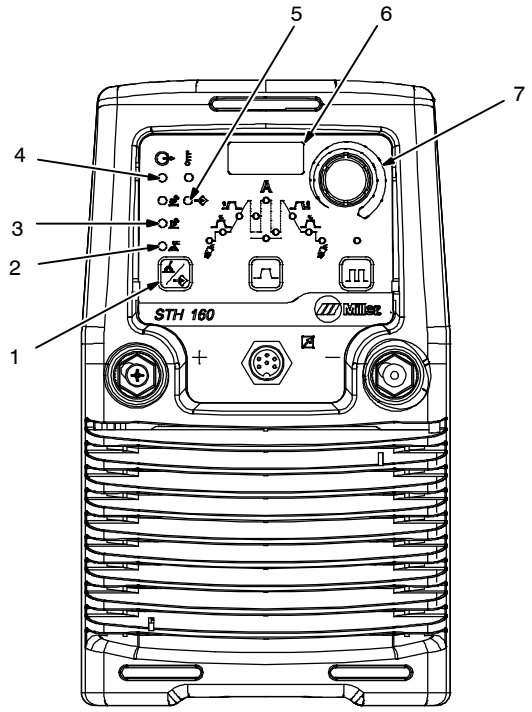

1 Process/Set-Up Selector Switch
2 TIG HF Start
3 TIG Lift Arc Start Light (LED)
4 Ready Light (LED)
5 Set-Up Light (LED)
6 Ammeter And Parameter Display (Meter)
7 Amperage/Set-Up Adjustment Control

2T and 4T are used with the TIG process. Select TIG process according to Section 4-9.

☞ *Unit will automatically exit the set-up menu if no activity is detected for more than three seconds. Press and hold Process/Set-Up Adjustment control to re-enter set-up mode.*

While in the set-up mode, to change between 2T and 4T proceed as follows:

Press and hold the Process/Set-Up Selector switch until Set-Up light begins to flash and meter displays 2T.

Rotate Amperage/Set-Up Adjustment control to switch between 2T and 4t.

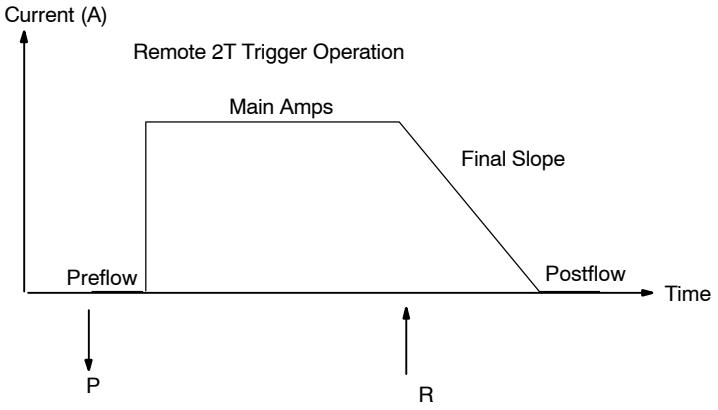

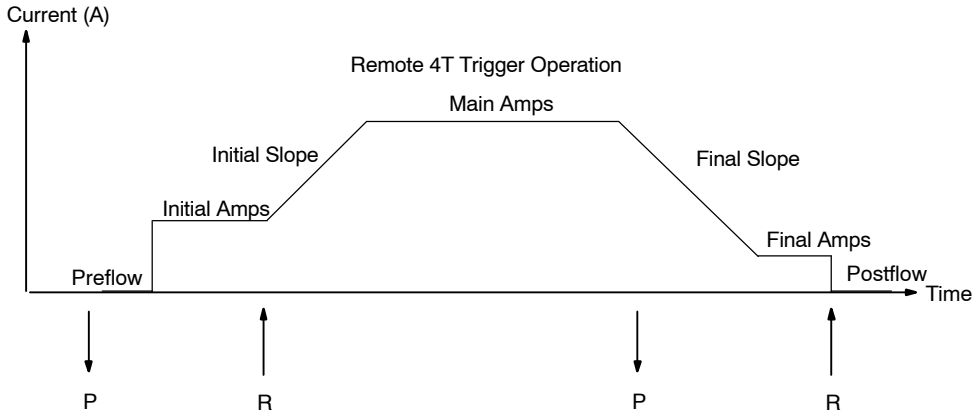

4-12. Sequence Controls And Slope Down Settings (STH Models)

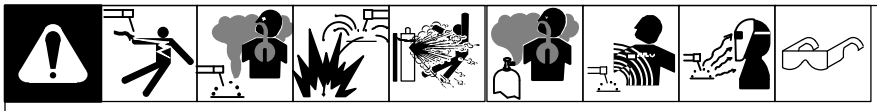

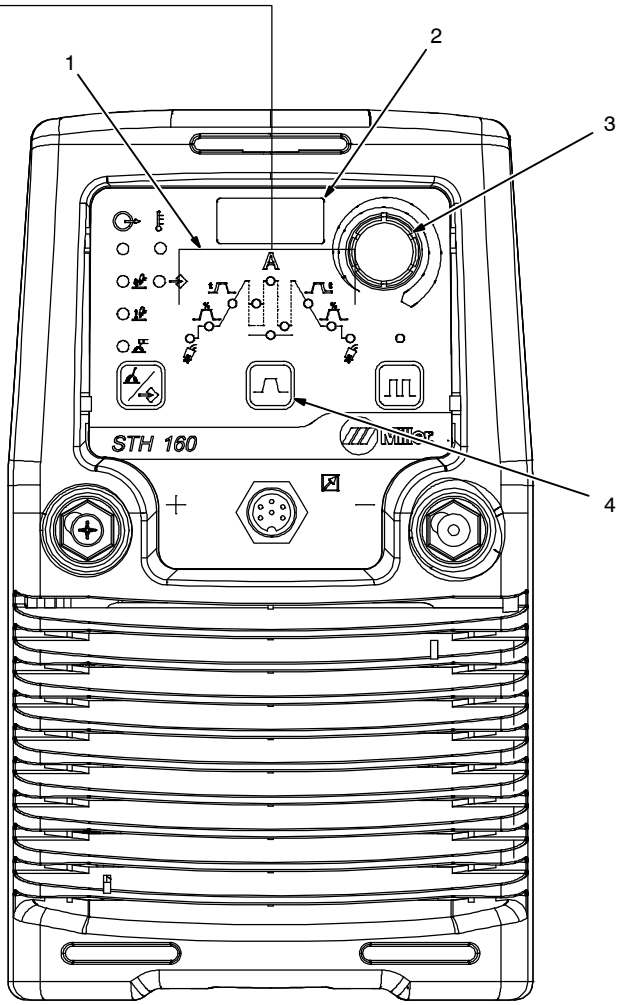

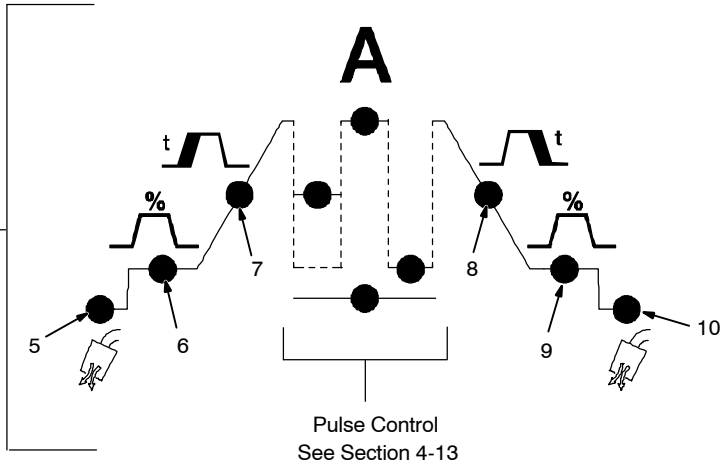

Sequencing is only available while using a TIG process.

Select TIG process according to Section 4-9.

1 Sequencer Control LEDs

2 Ammeter And Parameter Display (Meter)

3 Amperage/Set-Up Adjustment Control

4 Sequencer Parameters Switch

To enter Sequencer Control set-up mode and scroll through parameters, press and release the Sequencer Parameters switch. Selected parameter will be displayed on the meter and the corresponding LED lights.

Turn Amperage/Set-Up Adjustment control to change value of selected parameter. Value selected is displayed on the meter.

5 Preflow Time

Use control to set length of time gas flows before arc initiation. Default is 0.2 seconds (min=0s, max=2.0s).

6 Initial Current

Use control to set a starting amperage that is different from the weld amperage. Default is 40 percent. (min=10 percent or minimum value set during initial set-up, max=90 percent or maximum value set during initial set-up).

7 Slope Up Time

Use control select amount of time that it takes to slope up/down from initial amperage to weld amperage. To disable, set to 0. Default =1.0 second. (min=0s, max=10s).

8 Slope Down Time

Use control to select amount of time that it takes to slope up/down from weld amperage to final amperage. To disable, set to 0. Default =2.0 seconds. (min=0s, max=10s).

Application::

Slope Down Time should be used while TIG welding materials that are crack sensitive, and/or the operator wants to eliminate the crater at the end of the weld.

9 Final Current

Use control to select amperage to which weld amperage has sloped up/down to. Default is 30 percent. (min=10 percent or minimum value set during initial set-up, max=90 percent or maximum value set during initial set-up).

10 Post Flow Time

Use control to set length of time gas flows after welding stops to protect weld puddle.

4-13. Pulser Control Settings (STH Models)

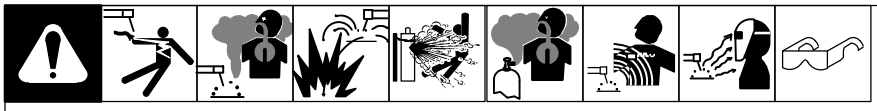

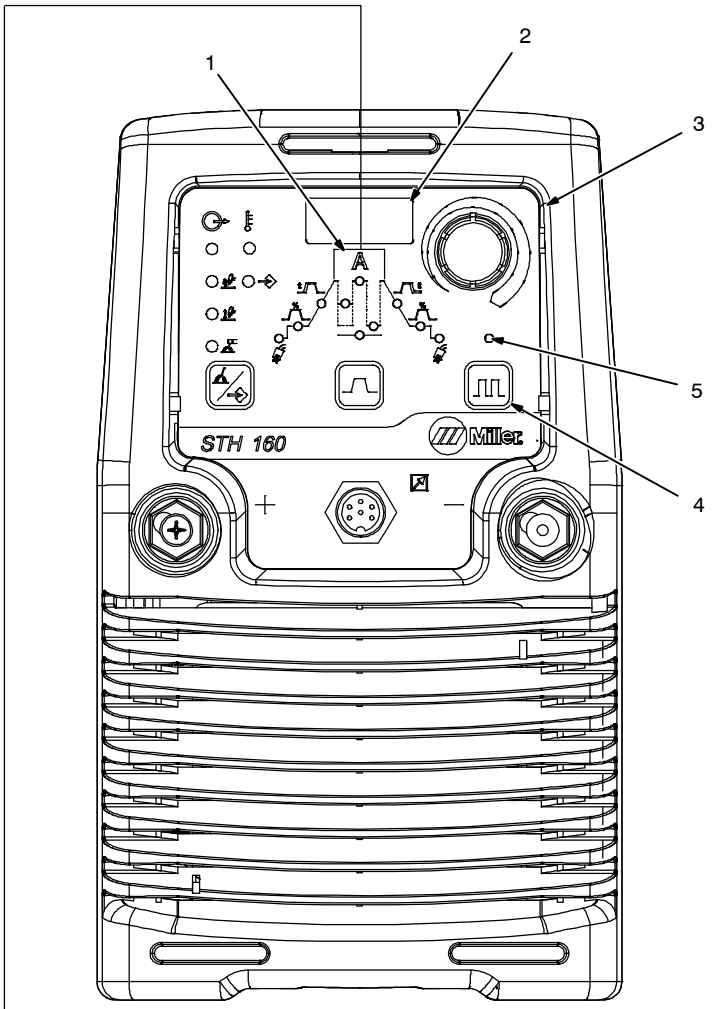

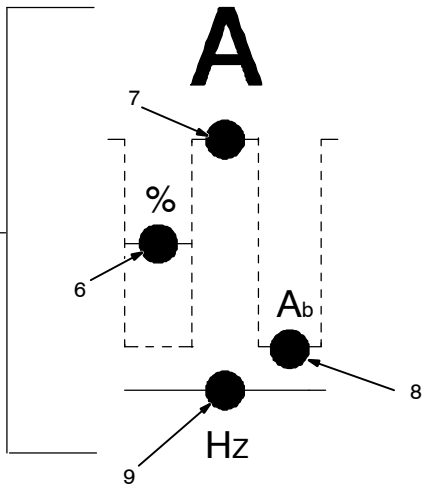

Pulsing is only available while using a TIG process.

Select TIG process according to Section 4-9.

1 Pulser LEDs

2 Ammeter And Parameter Display (Meter)

3 Amperage/Set-Up Adjustment Control

4 Pulser Control Switch

5 Pulser Light (LED)

Pulser light is on when pulser is on.

To enter Pulser set-up mode and scroll through parameters, press and release the Pulser Control switch. Selected parameter will be displayed on the meter and corresponding LED lights.

Turn Amperage/Set-Up Adjustment control to change value of selected parameter. Value selected is displayed on the meter.

6 Duty Cycle (%)

Use control to control weld puddle cooling. Default is 50 percent (min=0.1 percent, max=90 percent).

7 Peak Current

Peak amperage is set using the Amperage/Set-Up Adjustment control. Peak amperage is the highest welding amperage allowed to occur in the pulse cycle. Weld penetration varies directly with peak amperage. The default value=50 A.

8 Background Current (Ab)

Use Background Amps control to set the low pulse of the weld amperage, which cools the weld puddle and affects overall heat input. Background Current is set as a percentage of peak amperage. Default is 40 percent (min=10 percent, max=90 percent).

9 Pulse Frequency (Hz)

Pulse Frequency controls weld bead appearance. Default=60Hz (min=0.4 Hz, max=300Hz).

Application:

Pulsing refers to the alternating raising and lowering of the weld output at a specific rate. The raised portions of the weld output are controlled in width, height, and frequency, forming pulses of weld output. These pulses and the lower amperage level between them (called the background current) alternately heat and cool the molten weld puddle. The combined effect gives the operator better control of penetration, bead width, crowning, undercutting, and heat input.

4-14. Resetting Unit To Factory Default Settings (STi And STH Models)

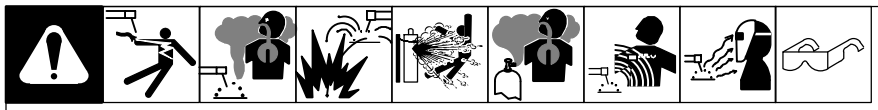

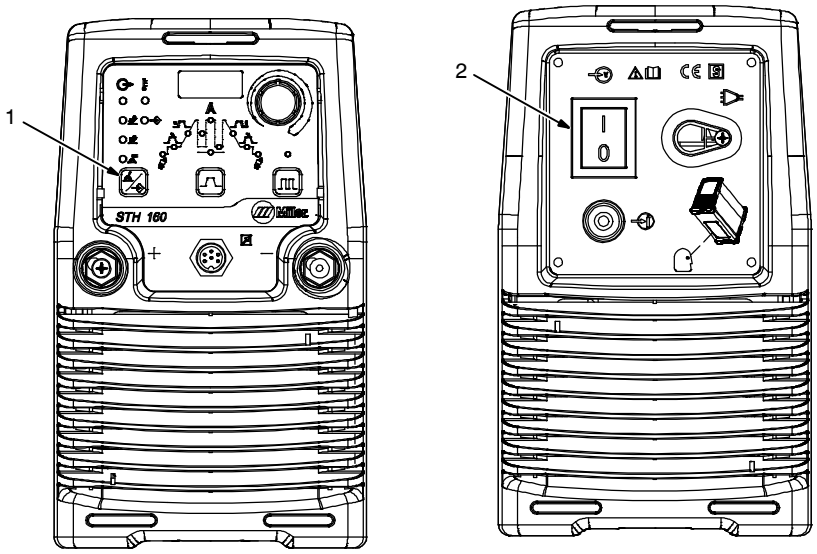

☞ *This procedure will delete all operator specified parameters, and recall all factory parameters.*

1 Process/Set-up Switch

2 Power Switch

Turn unit off. Turn unit on while pressing and holding Process/Set-up switch; wait for a beep signal (about two seconds). Factory default settings are now restored.

956142809_3-6_D

4-15. Lift-Arc™ And HF TIG Start Procedures

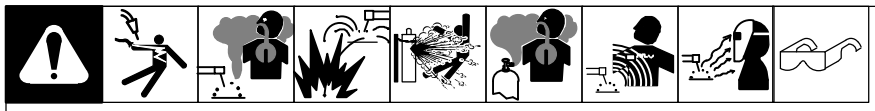

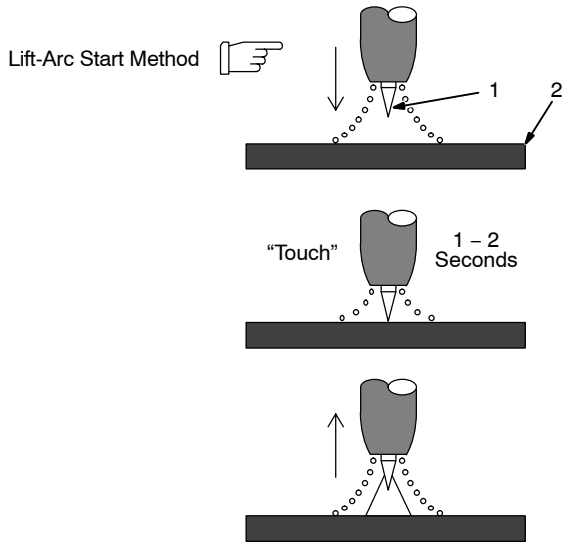

Lift-Arc Start

When Lift-Arc button light is On, start arc as follows:

1 TIG Electrode

2 Workpiece

Touch tungsten electrode to workpiece at weld start point, enable output and shielding gas with torch trigger, foot control, or hand control. **Hold electrode to workpiece for 1-2 seconds**, and slowly lift electrode. Arc is formed when electrode is lifted.

Normal open-circuit voltage is not present before tungsten electrode touches workpiece; only a low sensing voltage is present between electrode and workpiece. The solid-state output contactor does not energize until after electrode is touching workpiece. This allows electrode to touch workpiece without overheating, sticking, or getting contaminated.

Application:

Lift-Arc is used for the DCEN or AC GTAW process when HF Start method is not permitted, or to replace the scratch method.

HF Start

When HF Start button light is On, start arc as follows:

High frequency turns on to help start arc when output is enabled. High frequency turns off when arc is started, and turns on whenever arc is broken to help restart arc.

Application:

HF start is used for the DCEN GTAW process when a non-contact arc starting method is required.

SECTION 5 – MAINTENANCE AND TROUBLESHOOTING

5-1. Routine Maintenance

Disconnect power before maintaining.

☞ *Maintain more often during severe conditions.*

	✓ = Check ◇ = Change ◯ = Clean Δ = Repair ☆ = Replace * To be done by Factory Authorized Service Agent
Every 3 Months	✓☆ Labels ✓ ☆ Gas Hoses 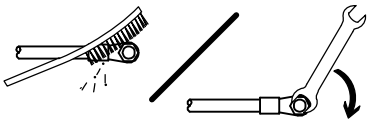 ◯ Weld Terminals
Every 3 Months	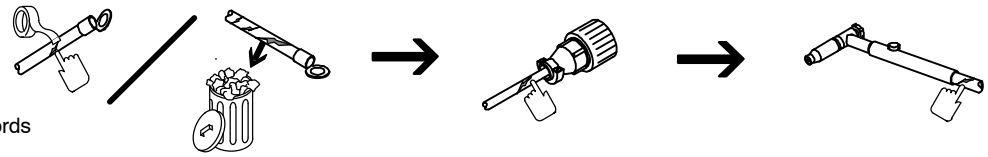 ✓Δ ☆Cables And Cords
Every 6 Months	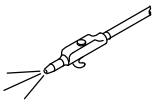 **Do not remove case when blowing out inside of unit.** Blow out inside. Direct airflow through front and back louvers. ◯:During heavy service, clean monthly.

5-2. High Temperature Help Display

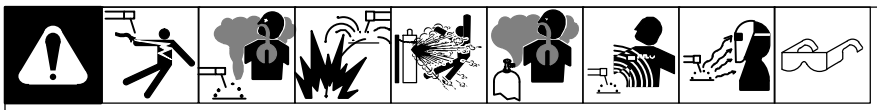

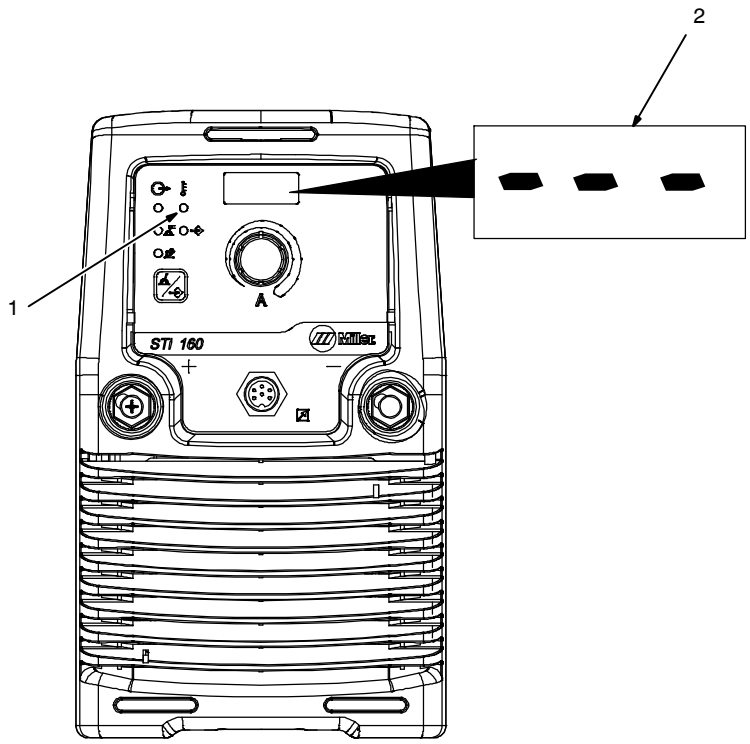

1 High Temperature Light (LED)

2 Meter Help Display

When unit over heats, High Temperature light turns on and unit emits an audible beep. The meter displays three dashes as shown. Unit shuts down and fans run until temperature drops within normal operating range (see Section 3-6).

NOTICE *– Wait at least four minutes before checking to see if temperature is within normal operating range.*

956142809_3-6_D

5-3. Troubleshooting

Trouble	Remedy
No weld output; unit completely inoperative; ready light (LED) Off.	Place line disconnect switch in On position (see Section 3-9).
	Check and replace line fuse(s), if necessary, or reset circuit breaker (see Section 3-9).
	Check for proper input power connections (see Sections 3-8 and 3-9).
No weld output; high temperature light (LED) On.	Unit overheated causing thermal shutdown. Allow unit to cool with fan On (see Section 3-6).
	Reduce duty cycle or amperage.
	Check and correct blocked/poor airflow to unit (see Section 3-9).
Erratic or improper welding arc or output.	Use proper size and type of weld cable (see your Distributor).
	Clean and tighten weld connections.
	Check electrode polarity and reverse if necessary; check and correct poor connections to workpiece.
Fan not operating.	Unit not warmed up enough to require fan cooling.
	Check for and remove anything blocking fan movement.
	Have Factory Authorized Service Agent check fan motor and control circuitry.
Stick welding problems: Hard starts; poor welding characteristics; unusual spattering.	Use proper type and size of electrode.
	Check electrode polarity and reverse if necessary; check and correct poor connections.
	Make sure a remote control is not connected.
TIG welding problems: Wandering arc; hard starts; poor welding characteristics; spattering problems.	Use proper type and size of tungsten.
	Use properly prepared tungsten.
	Check electrode polarity and reverse if necessary.
TIG welding problems: Tungsten electrode oxidizing and not remaining bright after welding.	Shield weld zone from drafts.
	Check for correct type shielding gas.
	Check and tighten gas fittings.
	Check electrode polarity and reverse if necessary.

Notes

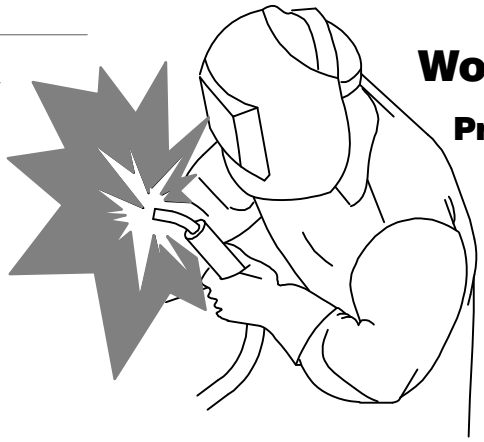

Work like a Pro!

Pros weld and cut safely. Read the safety rules at the beginning of this manual.

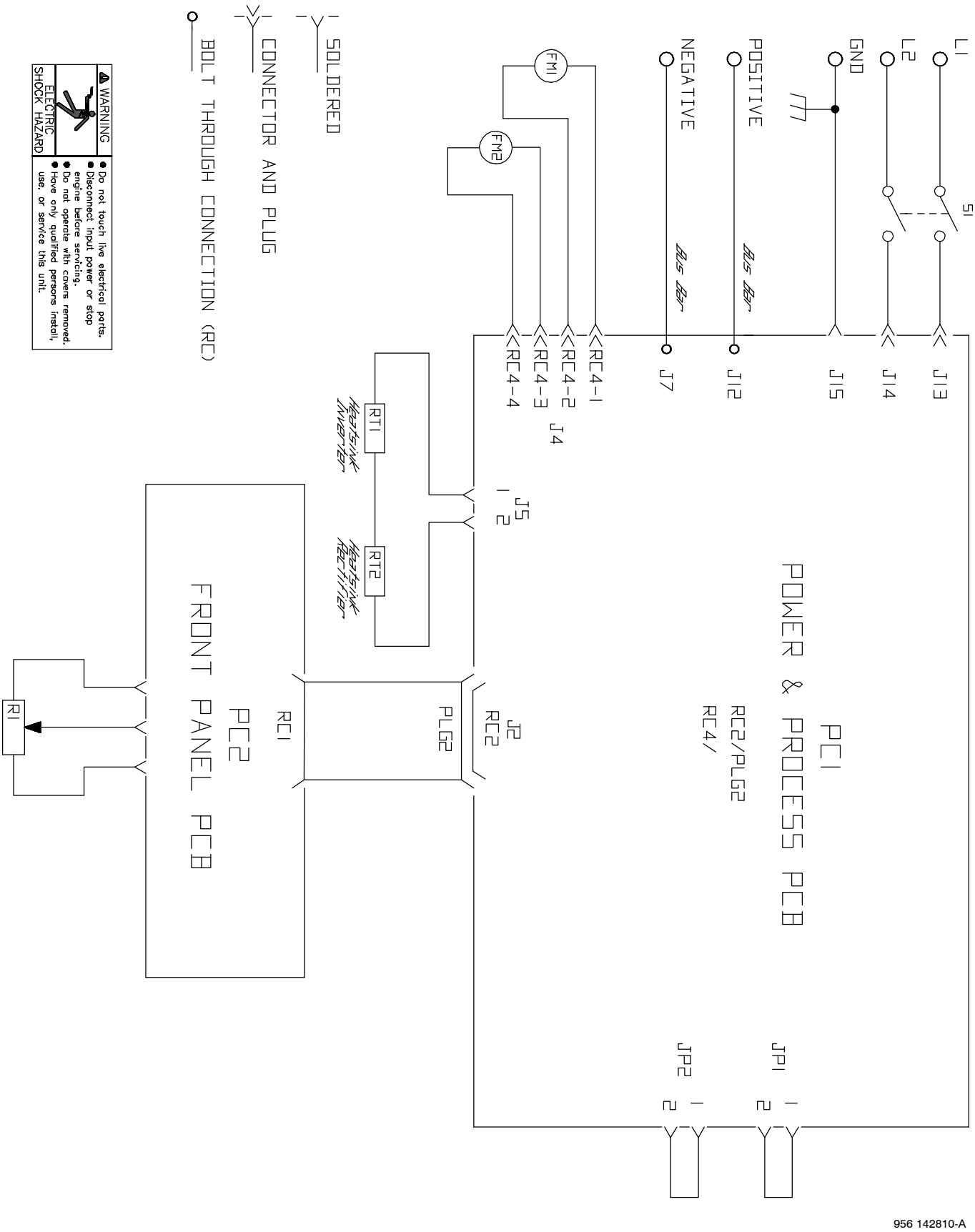

956 142810-A

Figure 6-1. Circuit Diagram For Si 160

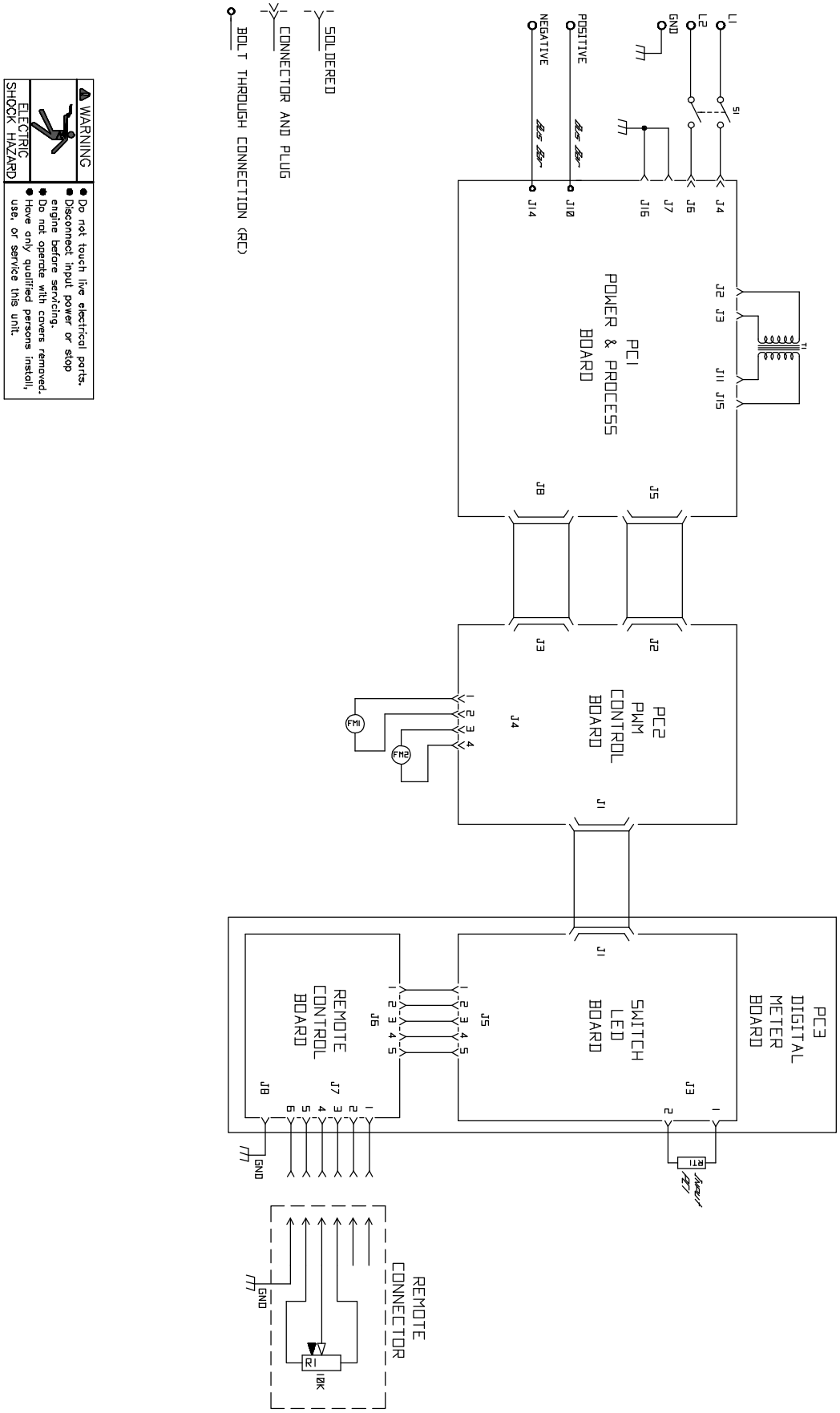

956 142811-B

Figure 6-2. Circuit Diagram For STi 160

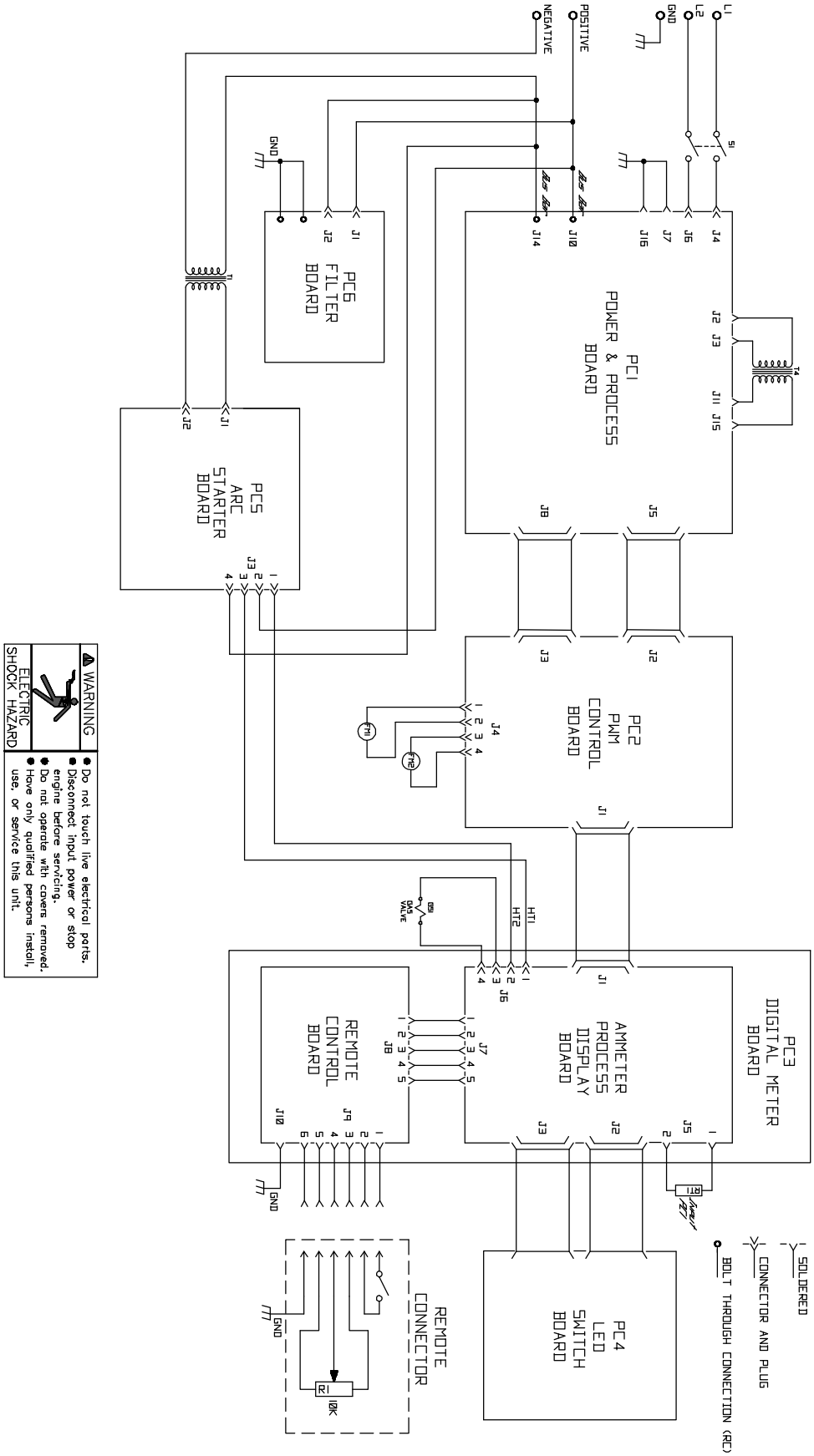

956 142812-C

Figure 6-3. Circuit Diagram For STH 160

Notes

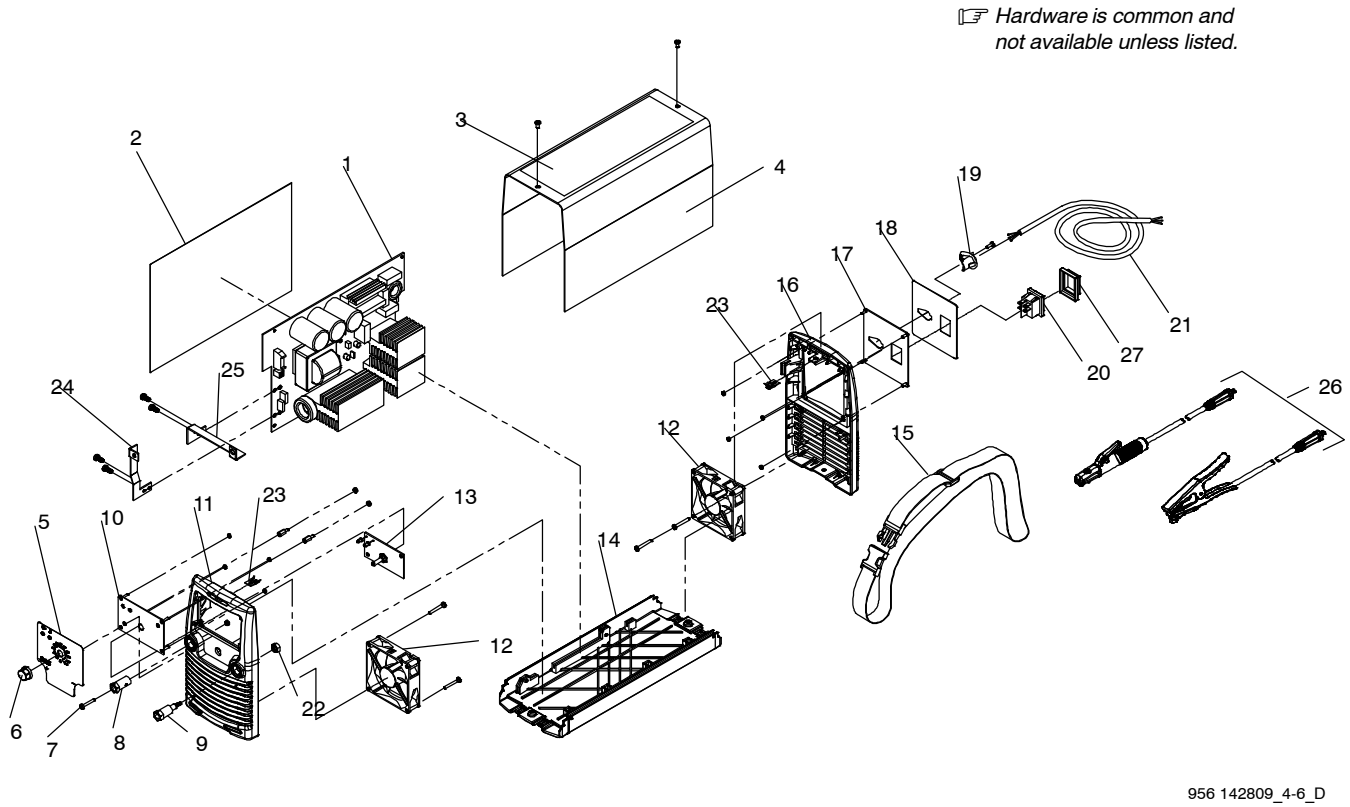

Figure 7-1. Main Assembly For Si 160

Item No.	Dia. Mkgs.	Part No.	Description	Quantity
			7-1. Main Assembly For Si 160	
1	PC1	057084156	Kit, PCB Assy	1
2		756033051	Insulator	1
3		956142819	Label, Warning	1
4		+156121043	Wrapper	1
5		356029228	Nameplate, Front	1
6		000193920	Knob, Pointer	1
7		000244862	Screw, M5– 8x12 Soc Hd–torx Stl Pld Sems Piloted	1
8		000208498	Receptacle, Twist Lock Power	1
9		000208612	Receptacle, Twist Lock Power/Gas	1
10		156005157	Plate, Front Upper Pcb Support	1
11		156118074	Panel Front	1
12	FM1,FM2	056126080	Fan, W/Leads And Plug	2
13	PC2	057084157	Circuit Board,Operator Interface	1
14		+156006070	Base	1
15		057116002	Strap, Shoulder	1
16		156118075	Panel, Rear	1
17		+056052011	Plate, Rear Power Switch/Cable Support	1
18		356029230	Nameplate, Rear	1
19		656089045	Strain Relief	1
20	S1	056067277	Switch, 16a 250vac	1
21		057014232	Cable, Power	1
22		000208497	Nut, M8–1.2 13mm Hex 8,3 Mm T Semi Cone Washer	1
23		000208558	Term, Friction 250x0,32	2
24		156005159	Bracket, Pcb Assy Support	1

Item No.	Dia. Mkgs.	Part No.	Description	Quantity
			7-1. Main Assembly For Si 160 (Continued)	
25		156005158	Bracket, pcb assy support	1
26		*058066079	Electrode holder/Ground Clamp Cable set, 3mt	1
27		156033037	Cover switch	1

+ When ordering a component originally displaying a precautionary label, the label should also be ordered.

* Optional.

To maintain the factory original performance of your equipment, use only Manufacturer's Suggested Replacement Parts. Model and serial number required when ordering parts from your local distributor.

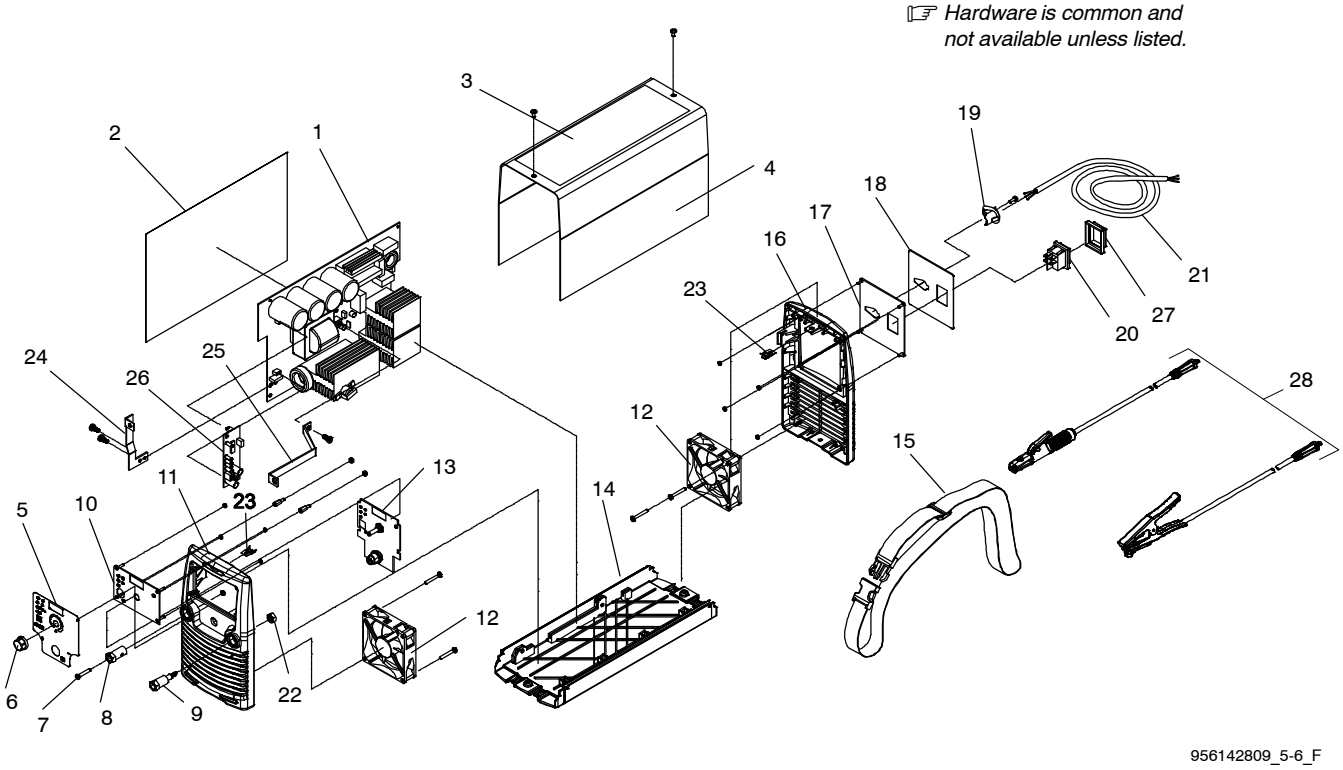

Figure 8-1. Main Assembly For STi 160

Item No.	Dia. Mkgs.	Part No.	Description	Quantity
			8-1. Main Assembly For STi 160	
1	PC1	057084158	Kit, PCB Assy	1
2		756033051	Insulator	1
3		956142819	Label, Warning	1
4		+156121043	Wrapper	1
5		356029229	Nameplate, Front	1
6		000193920	Knob, Pointer	1
7		000244862	Screw, M5– 8 X 12 Soc Hd–torx Stl Pld Sems Piloted	1
8		000208498	Receptacle, Twist Lock Power	1
9		000208612	Receptacle, Twist Lock Power/Gas	1
10		156005160	Plate, Front Upper Pcb Support	1
11		156118074	Panel Front	1
12	FM1,FM2	056126080	Fan, W/Leads And Plug	2
13	PC3	057084159	Circuit Board,Operator Interface	1
14		+156006070	Base	1
15		057116002	Strap, Shoulder	1
16		156118075	Panel Rear	1
17		+056052011	Plate, Rear Power Switch/Cable Support	1
18		356029230	Nameplate, Rear	1
19		656089045	Strain Relief	1
20	S1	056067277	Switch, 16a 250vac	1
21		057014232	Cable, Power	1
22		000208497	Nut, M8–1.2 13mm Hex 8.3 Mm T Semi Cone Washer	1
23		000208558	Term, Friction 250 X 0.32	2
24		156005159	Bracket, PCB Assy Support	1
25		156005161	Bracket, PCB Assy Support	1

Item No.	Dia. Mkgs.	Part No.	Description	Quantity
			8-1. Main Assembly For STi 160 (Continued)	
26	PC2	057084160	Circuit Board, Pwm	1
27		156033037	Cover Switch	1
28		*058066079	Electrode Holder/Ground Clamp Cable Set, 3mt	1

+ When ordering a component originally displaying a precautionary label, the label should also be ordered.

* Optional.

To maintain the factory original performance of your equipment, use only Manufacturer's Suggested Replacement Parts. Model and serial number required when ordering parts from your local distributor.

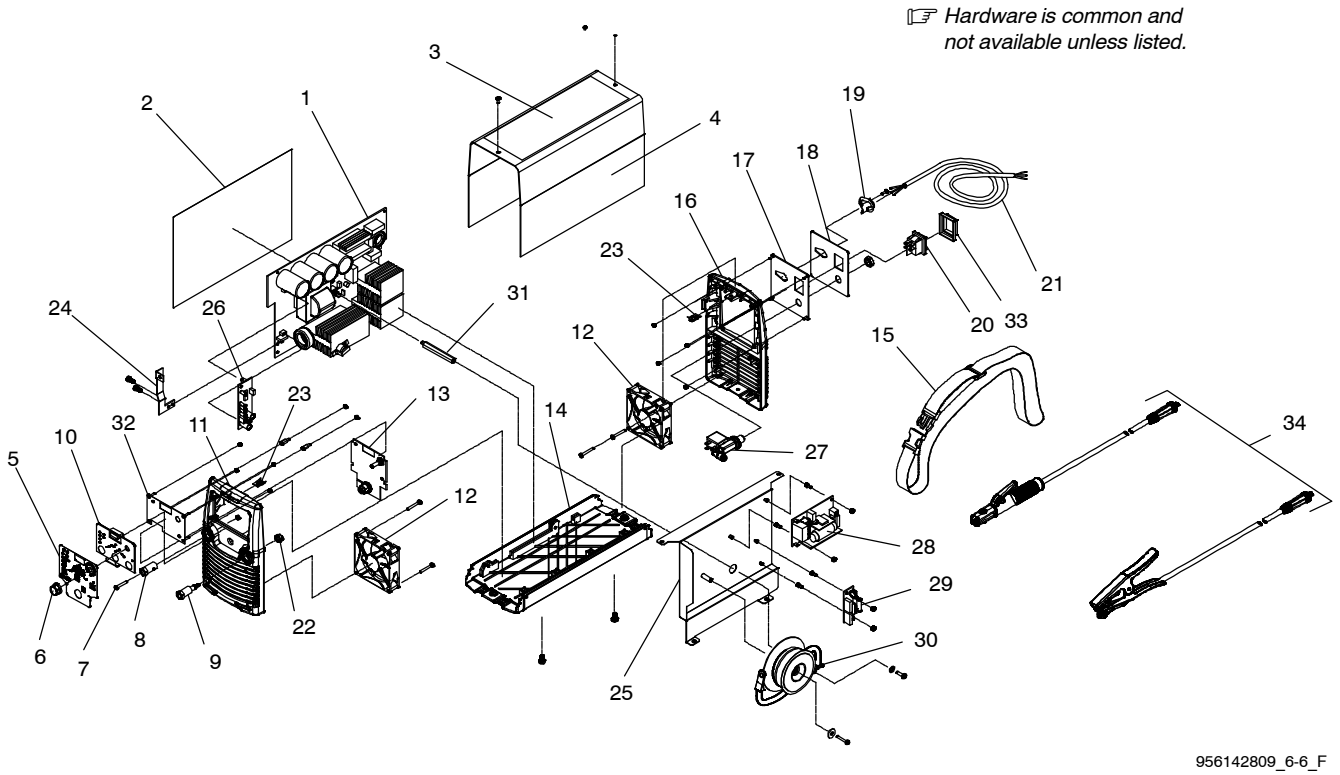

Figure 9-1. Main Assembly For STH 160

Item No.	Dia. Mkgs.	Part No.	Description	Quantity
Figure 9-1. Main Assembly For STH 160				
1	PC1	057084158	Kit, PDB Assy	1
2		756033051	Insulator	1
3		956142819	Label, Warning	1
4		+156121043	Wrapper	1
5		356029231	Nameplate, Front	1
6		000193920	Knob, Pointer	1
7		000244862	Screw, M5– 8 X 12 Soc Hd–torx Stl Pld Sems Piloted	1
8		000208498	Receptacle, Twist Lock Power	1
9		000208612	Receptacle, Twist Lock Power/Gas	1
10	PC4	057084161	Circuit Board, Led Switch	1
11		156118074	Panel Front	1
12	FM1,FM2	056126080	Fan, W/Leads And Plug	2
13	PC3	057084162	Circuit Board,Operator Interface	1
14		+156006070	Base	1
15		057116002	Strap, Shoulder	1
16		156118075	Panel Rear	1
17		056052011	Plate, Rear Power Switch/Cable Support	1
18		356029232	Nameplate, Rear	1
19		656089045	Strain Relief	1
20	S1	056067277	Switch, 16a 250vac	1
21		057014232	Cable, Power	1
22		000208497	Nut, M8–1.2 13mm Hex 8,3 Mm T Semi Cone Washer	1
23		000208558	Term, Friction 250 X 0.32	2
24		156005159	Bracket, PCB Assy Support	1
25		156005162	Panel, PDB Assy Support	1

Item No.	Dia. Mkgs.	Part No.	Description	Quantity

Figure 9-1. Main Assembly For STH 160 (Continued)

26	PC2	057084160	Circuit Board, Pwm	1
27	GS1	056061069	Valve, Gas Fitting	1
28	PC5	057084163	Circuit Board, Arc Starter	1
29	PC6	057084164	Circuit Board, Filter	1
30		058021155	Xfmr, HF	1
31		056001007	Shaft, M10/32 F M5x75	1
32		156005163	Plate, Front Upper Pcb Support	1
33		156033037	Cover Switch	1
34		*058066079	Electrode Holder/Ground Clamp Cable Set, 3mt	1

+ When ordering a component originally displaying a precautionary label, the label should also be ordered.

* Optional.

To maintain the factory original performance of your equipment, use only Manufacturer's Suggested Replacement Parts. Model and serial number required when ordering parts from your local distributor.

Notes

TRUE BLUE® WARRANTY

Effective January 1, 2011
(Equipment with a serial number preface of MB or newer)

This limited warranty supersedes all previous Miller warranties and is exclusive with no other guarantees or warranties expressed or implied.

LIMITED WARRANTY – Subject to the terms and conditions below, ITW Welding Products Italy warrants to its original retail purchaser that new Miller equipment sold after the effective date of this limited warranty is free of defects in material and workmanship at the time it is shipped by Miller. THIS WARRANTY IS EXPRESSLY IN LIEU OF ALL OTHER WARRANTIES, EXPRESS OR IMPLIED, INCLUDING THE WARRANTIES OF MERCHANTABILITY AND FITNESS.

Within the warranty periods listed below, Miller will repair or replace any warranted parts or components that fail due to such defects in material or workmanship. Miller must be notified in writing within thirty (30) days of such defect or failure, at which time Miller will provide instructions on the warranty claim procedures to be followed.

Miller shall honor warranty claims on warranted equipment listed below in the event of such a failure within the warranty time periods. All warranty time periods start on the date the equipment was delivered to the original retail purchaser or one year after the equipment is shipped to a European distributor or eighteen months after the equipment is shipped to an International distributor.

1. 5 Years Parts — 3 Years Labor
   * Original main power rectifiers only to include SCRs, diodes, and discrete rectifier modules
2. 3 Years — Parts and Labor
   * Engine Driven Welding Generators **(NOTE: Engines are warranted separately by the engine manufacturer.)**
   * HF Units
   * Inverter Power Sources (Unless Otherwise Stated)
   * Process Controllers
   * Semi-Automatic and Automatic Wire Feeders
   * Transformer/Rectifier Power Sources
3. 2 Years — Parts
   * Auto-Darkening Helmet Lenses (No Labor)
   * Migmatic 171
4. 1 Year — Parts and Labor Unless Specified
   * Automatic Motion Devices
   * Field Options (NOTE: Field options are covered under True Blue® for the remaining warranty period of the product they are installed in, or for a minimum of one year — whichever is greater.)
   * Induction Heating Power Sources, Coolers, and Electronic Controls/Recorders
   * Motor Driven Guns (w/exception of Spoolmate Spoolguns)
   * Positioners and Controllers
   * Powered Air Purifying Respirator (PAPR) Blower Unit (No Labor)
   * Racks
   * Running Gear and Trailers
   * Subarc Wire Drive Assemblies
   * Water Coolant Systems (Hydramate 1 and 2)
   * Water Coolant Systems (USA Models, Non-Integrated)
   * Work Stations/Weld Tables (No Labor)
5. 6 Months — Parts
   * Batteries
6. 90 Days — Parts
   * Accessory (Kits)
   * Canvas Covers
   * Induction Heating Coils and Blankets
   * MIG Guns
   * Remote Controls
   * Replacement Parts (No Labor)
   * Spoolmate Spoolguns

Miller's True Blue® Limited Warranty shall not apply to:

1. **Consumable components; such as contact tips, cutting nozzles, contactors, brushes, switches, slip rings, relays or parts that fail due to normal wear.**
2. Items furnished by Miller, but manufactured by others, such as engines or trade accessories. These items are covered by the manufacturer's warranty, if any.
3. Equipment that has been modified by any party other than Miller, or equipment that has been improperly installed, improperly operated or misused based upon industry standards, or equipment which has not had reasonable and necessary maintenance, or equipment which has been used for operation outside of the specifications for the equipment.

MILLER PRODUCTS ARE INTENDED FOR PURCHASE AND USE BY COMMERCIAL/INDUSTRIAL USERS AND PERSONS TRAINED AND EXPERIENCED IN THE USE AND MAINTENANCE OF WELDING EQUIPMENT.

In the event of a warranty claim covered by this warranty, the exclusive remedies shall be, at Miller's option: (1) repair; or (2) replacement; or, where authorized in writing by Miller in appropriate cases, (3) the reasonable cost of repair or replacement at an authorized Miller service station; or (4) payment of or credit for the purchase price (less reasonable depreciation based upon actual use) upon return of the goods at customer's risk and expense. Miller's option of repair or replacement will be F.O.B., Factory at ITW Welding Products Group Europe or F.O.B. at a Miller authorized service facility as determined by Miller. Therefore no compensation or reimbursement for transportation costs of any kind will be allowed.

TO THE EXTENT PERMITTED BY LAW, THE REMEDIES PROVIDED HEREIN ARE THE SOLE AND EXCLUSIVE REMEDIES. IN NO EVENT SHALL MILLER BE LIABLE FOR DIRECT, INDIRECT, SPECIAL, INCIDENTAL OR CONSEQUENTIAL DAMAGES (INCLUDING LOSS OF PROFIT), WHETHER BASED ON CONTRACT, TORT OR ANY OTHER LEGAL THEORY.

ANY EXPRESS WARRANTY NOT PROVIDED HEREIN AND ANY IMPLIED WARRANTY, GUARANTY OR REPRESENTATION AS TO PERFORMANCE, AND ANY REMEDY FOR BREACH OF CONTRACT TORT OR ANY OTHER LEGAL THEORY WHICH, BUT FOR THIS PROVISION, MIGHT ARISE BY IMPLICATION, OPERATION OF LAW, CUSTOM OF TRADE OR COURSE OF DEALING, INCLUDING ANY IMPLIED WARRANTY OF MERCHANTABILITY OR FITNESS FOR PARTICULAR PURPOSE, WITH RESPECT TO ANY AND ALL EQUIPMENT FURNISHED BY MILLER IS EXCLUDED AND DISCLAIMED BY MILLER.

Miller®

Owner's Record

Please complete and retain with your personal records.

Model Name Serial/Style Number

Purchase Date (Date which equipment was delivered to original customer.)

Distributor

Address

Country Zip/Postal Code

For Service

Contact a DISTRIBUTOR or SERVICE AGENCY near you.

Always provide Model Name and Serial/Style Number.

Contact your Distributor for:

- Welding Supplies and Consumables
- Options and Accessories
- Service and Repair
- Replacement Parts
- Owner's Manuals

Contact the Delivering Carrier to:

File a claim for loss or damage during shipment.

For assistance in filing or settling claims, contact your distributor and/or equipment manufacturer's Transportation Department.

ITW Welding Products Italy S.r.l.
Via Privata Iseo, 6/E
20098 San Giuliano
Milanese, Italy
Phone: 39 (0) 2982901
Fax: 39 (0) 298290-203
email: miller@itw–welding.it

ORIGINAL INSTRUCTIONS – PRINTED IN USA

© 2011 Miller Electric Mfg. Co. 2011–01